Contents | Page

Assembly instructions

Remarks on the axial screw termination see chapter 00

Step 1: The outer diameter of the cable must not exceed 19.5 mm.
Strip the cable by 19 mm.

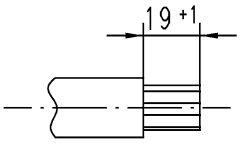

Insert the cable through hood.

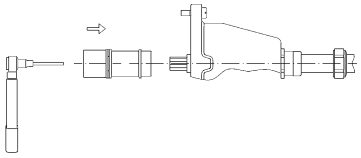

Step 2: Press the Han HC contact on the cable strand and apply tightening torque according table 1 by using a tightening torques tool. Take care that all cable strands fit completely inside the contact termination cavity. During assembling adhere the cable and the contact to minimise axial movement or twisting.

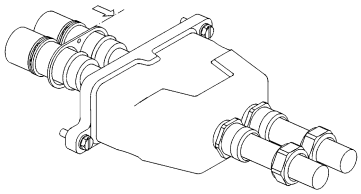

Step 3: Move the perforated plate across the HC contacts.

Step 4: Fit frame onto the hexagon shape of the HC contact. Coding can be arranged by turning the contact within 60° steps. Bolt the frame together with perforated plate.

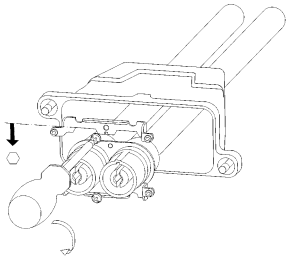

Step 5: Push back the packet inside the good.

Step 6: Tighten the four M3 (tightening torque 0.5 Nm) screws and the cable gland according manufacturer recommendation.

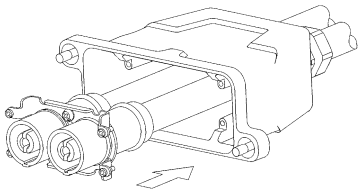

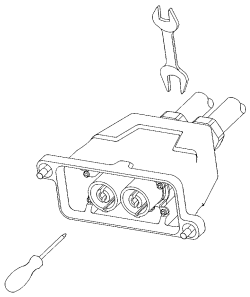

During the assembly of the frame for 4 poles the following tightening torques have to be taken into consideration:
A = 0.5 Nm
B = 1.5 Nm
C = 0.25 Nm

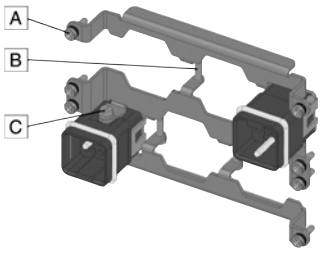

Assembly instructions

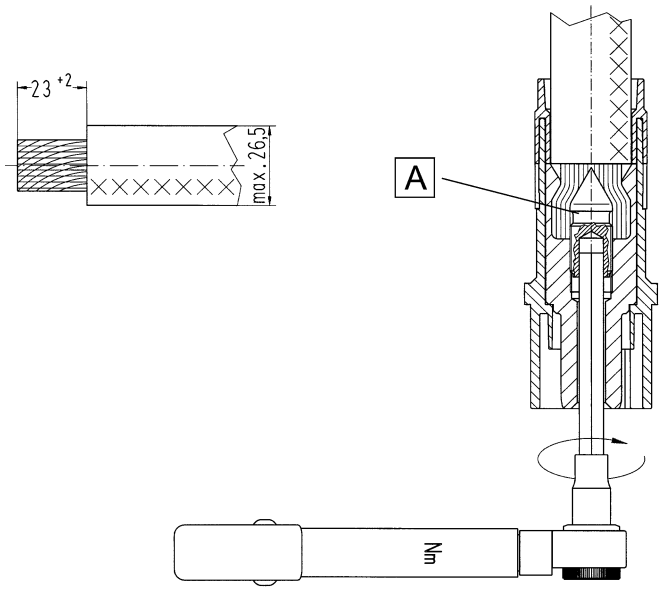

1. Strip cable to 23+2 mm.

2. Push conductor through the cable gland and the housing. Push the stripped end of the conductor into the termination entry of the module until the insulation touches the contact.

3. To tighten the axial screw, a hexagonal wrench size 8 is needed. Insert the hexagonal wrench on the mating side of the contact. At the same time, push the conductor over the axial screw.The locking screw has to be tightened with the recommended tightening torque that is determined by the conductor's cross section.

4. Once the modules are terminated, they are mounted into the housing by using two metal frames (tightening torque of the fixing screws = 0.5 Nm). The modules have 4 pegs formed by 2 parallel ribs (each peg shapes like a "H"). Each rib takes 1 pole frame, where the lateral link has to go into the relief of the frame. The 2 pole frames have 2 cutouts on the wall which get fitted to the "H"-shaped pegs (see figure). The heads of the screws have to face the mating direction of the module. Coding can be established by rotating the contact by 90 degrees. Therefore it is important that the corresponding modules are assembled in the correct position otherwise mating is not possible.

5. After assembling the modules in the housing, the tightening torque of the locking screw can be checked and corrected if necessary.

6. After final assembly of the contacts, the user should ensure that the cable is adequately strain reliefed to protect the contact from radial stress.

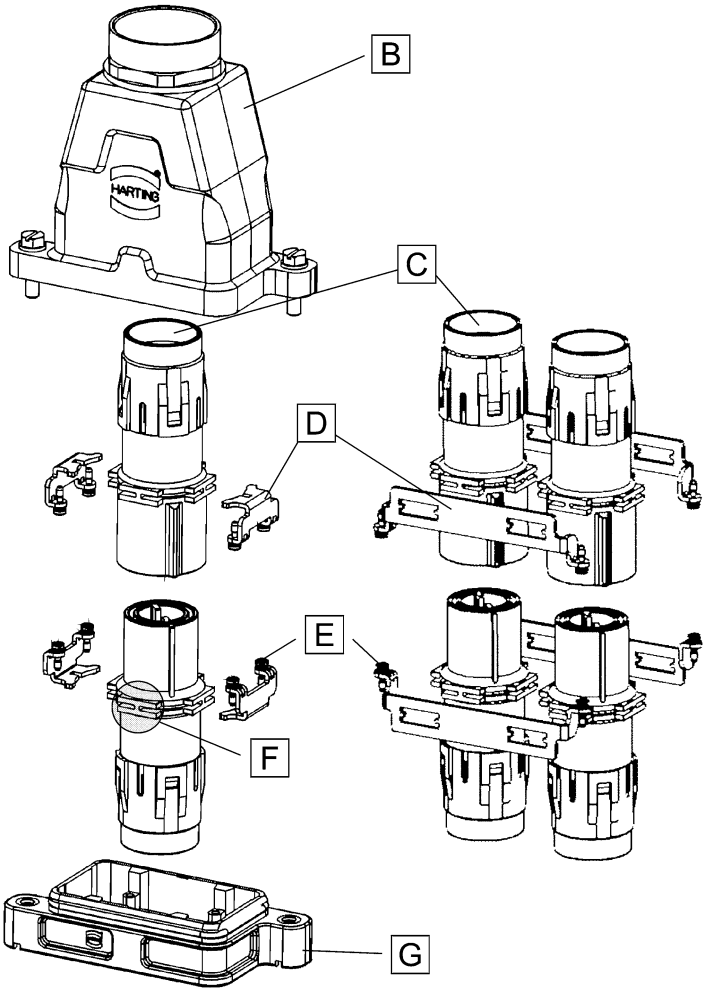

A - Axial screw, B - Hood, C - Termination entry, D - Frame, E - Fixing screws, F - parallel ribs with H-shape, G - Housings bulkhead mounting,

Features

- The ideal connector for transmission of high currents requiring little space
- The vertical and angled versions offer solutions for almost all applications
- The angled versions offer a space-saving 90° cable wiring

Technical characteristics

Number of contacts	3
Rated current	200 A
Rated voltage conductor-earth	1150 V
Rated voltage conductor-conductor	2000 V
Rated impulse voltage	8 kV
Pollution degree	3
Rated current acc. to UL	200 A
Rated current acc. to CSA	160 A
Rated voltage acc. to UL	600 V
Rated voltage acc. to CSA	600 V
Insulation resistance	≥10^{10} Ω
Contact resistance	≤0.2 mΩ
Limiting temperature	-40 ... +125 °C
Mating cycles	≥500
Material (insert)	Polycarbonate
Colour (insert)	RAL 7032 (pebble grey)
Material (contacts)	Copper alloy
Material flammability class acc. to UL 94	V-0
RoHS	compliant with exemption
RoHS exemptions	**6a:** Lead as an alloying element in steel for machining purposes and in galvanised steel containing up to 0.35 % lead by weight

Derating

Current carrying capacity

The current carrying capacity of the connectors is limited by the thermal load capability of the contact element material including the connections and the insulating parts. The derating curve is therefore valid for currents which flow constantly (non-intermittent) through each contact element of the connector evenly, without exceeding the allowed maximum temperature.

Measuring and testing techniques acc. to IEC 60512-5-2

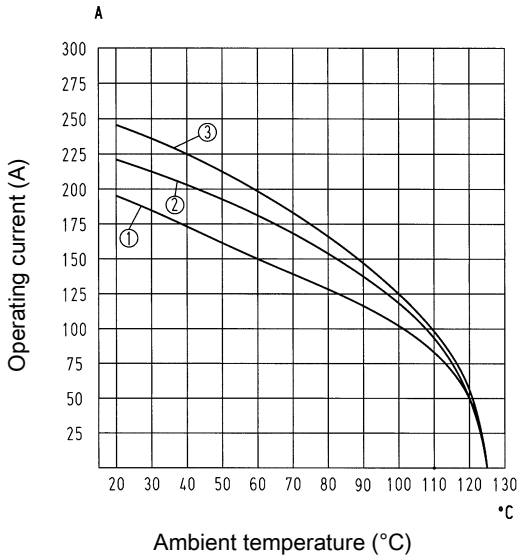

① Conductor cross-section 35 mm²
② Conductor cross-section 50 mm²
③ Conductor cross-section 70 mm²

Specifications and approvals

EN 60664-1
IEC 61984
UL 1977 ECBT2.E235076
CSA-C22.2 No. 182.3 ECBT8.E235076
DNV GL

Details

ATTENTION! Only to be used with special Han® 24 HPR hoods and housings!

Remarks on the axial screw technique

The wire gauges mentioned in the catalogue refer to geometric wire gauges of cables.

Hex key (A/F 5) see chapter 90

Number of contacts

3

200 A 1.150/2.000 V 8 kV 3

Identification	Conductor cross-section (mm²)	Part number Male	Part number Female	Drawing (dimensions in mm)
Han-Com®, Han® K 3/0, Straight, Axial screw termination, Contact surface: Silver plated 	35 ... 70	09 38 005 2621	09 38 005 2721	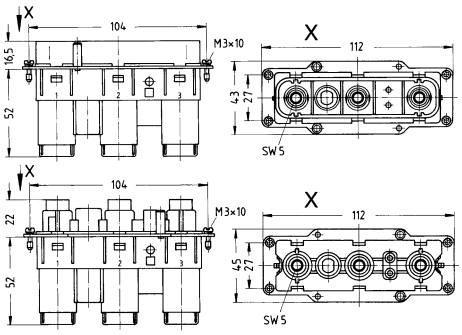 Distance for contact max. 21 mm Stripping length 22 mm Tightening torque 8 Nm @ 35 mm², 9 Nm @ 50 mm², 10 Nm @ 70 mm²
Han-Com®, Han® K 3/0, Angled, Axial screw termination, Contact surface: Silver plated 	35 ... 70	09 38 005 2622	09 38 005 2722	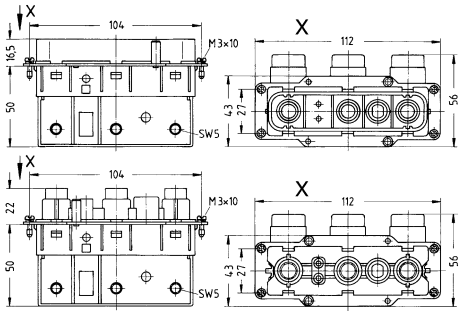 Distance for contact max. 21 mm Stripping length 22 mm Tightening torque 8 Nm @ 35 mm², 9 Nm @ 50 mm², 10 Nm @ 70 mm²

Features

- The ideal connector for transmission of high currents requiring little space
- The vertical and angled versions offer solutions for almost all applications
- The angled versions offer a space-saving 90° cable wiring

Technical characteristics

Number of contacts	3
Additional contacts	+ 2 additional signal contacts
Rated current	200 A
Rated voltage conductor-earth	1150 V
Rated voltage conductor-conductor	2000 V
Rated impulse voltage	8 kV
Pollution degree	3
Rated current (signal)	16 A
Rated voltage (signal)	400 V
Rated impulse voltage (signal)	6 kV
Pollution degree (signal)	3
Rated current acc. to UL	200 A
Rated current acc. to UL (signal)	16 A
Rated current acc. to CSA	160 A
Rated current acc. to CSA (signal)	16 A
Rated voltage acc. to UL	600 V
Rated voltage acc. to UL (signal)	600 V
Rated voltage acc. to CSA	600 V
Rated voltage acc. to CSA (signal)	600 V
Insulation resistance	≥10^{10} Ω
Contact resistance	≤0.2 mΩ
Contact resistance, signal area	≤1 mΩ
Limiting temperature	-40 ... +125 °C
Mating cycles	≥500
Material (insert)	Polycarbonate
Colour (insert)	RAL 7032 (pebble grey)
Material (contacts)	Copper alloy
Material flammability class acc. to UL 94	V-0
RoHS	compliant with exemption
RoHS exemptions	**6a:** Lead as an alloying element in steel for machining purposes and in galvanised steel containing up to 0.35 % lead by weight, **6c:** Copper alloy containing up to 4 % lead by weight

Derating

Current carrying capacity

The current carrying capacity of the connectors is limited by the thermal load capability of the contact element material including the connections and the insulating parts. The derating curve is therefore valid for currents which flow constantly (non-intermittent) through each contact element of the connector evenly, without exceeding the allowed maximum temperature.

Measuring and testing techniques acc. to IEC 60512-5-2

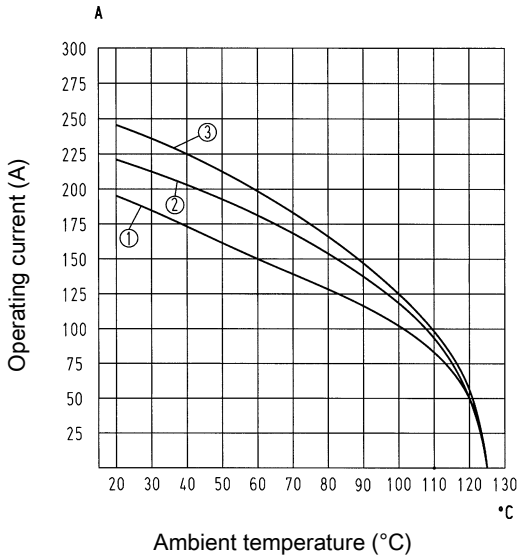

① Conductor cross-section 35 mm²
② Conductor cross-section 50 mm²
③ Conductor cross-section 70 mm²

Specifications and approvals

EN 60664-1
IEC 61984
UL 1977 ECBT2.E235076
CSA-C22.2 No. 182.3 ECBT8.E235076
DNV GL

Details

ATTENTION! Only to be used with special Han® 24 HPR hoods and housings!

Remarks on the axial screw technique

The wire gauges mentioned in the catalogue refer to geometric wire gauges of cables.

Hex key (A/F 5) see chapter 90

Hex key (A/F 4) for PE contact see chapter 90

Number of contacts

3+ ⏚

200 A 1.150/2.000 V 8 kV 3
+ 2 additional signal contacts
16 A 400 V 6 kV 3

Identification	Conductor cross-section (mm²)	Part number Male	Part number Female	Drawing (dimensions in mm)
Han-Com®, Han® K 3/2, Straight, Axial screw termination / screw termination, Contact surface: Silver plated 	35 ... 70, 0.5 ... 2.5 Signal, 16 ... 35 PE	09 38 005 2601	09 38 005 2701	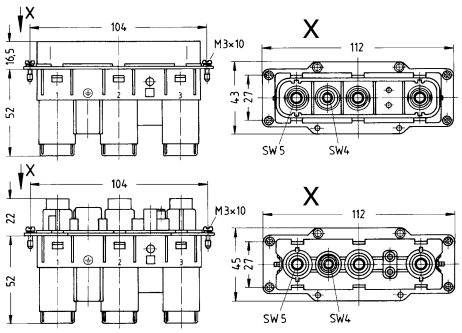 Distance for contact max. 21 mm Stripping length 22 mm Tightening torque 8 Nm @ 35 mm², 9 Nm @ 50 mm², 10 Nm @ 70 mm² Signal contacts: Stripping length 7 mm, Tightening torque 0.5 Nm PE contact: Stripping length 14 mm, Tightening torque 6 Nm
Han-Com®, Han® K 3/2, Angled, Axial screw termination / screw termination, Contact surface: Silver plated 	35 ... 70, 0.5 ... 2.5 Signal, 16 ... 35 PE	09 38 005 2602	09 38 005 2702	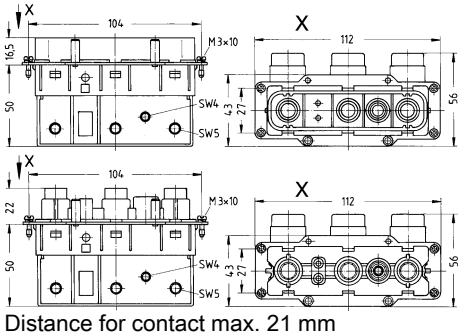 Distance for contact max. 21 mm Stripping length 22 mm Tightening torque 8 Nm @ 35 mm², 9 Nm @ 50 mm², 10 Nm @ 70 mm² Signal contacts: Stripping length 7 mm, Tightening torque 0.5 Nm PE contact: Stripping length 14 mm, Tightening torque 6 Nm

Features

- Hoods/housings for harsh outdoor environments
- Metal hoods and housings with excellent corrosion resistance
- Corrosion resistance ASTM B117-09 (500 h)
- Excellent EMC characteristics
- Screw locking M6
- Field of application: for external electrical interconnections in vehicles, in highly demanding environments and wet areas, as well as for sensitive interconnections that have to be shielded
- Distinguishing feature: colour-coded black, internal seal

Technical characteristics

Limiting temperature	-40 ... +125 °C
Tightening torque (screw locking)	4 Nm
Degree of protection acc. to IEC 60529	IP65, IP68, IP69 / IPX9K acc. to ISO 20653
Type rating acc. to UL 50 / UL 50E	4, 4X, 12
Material (hood/housing)	Aluminium die-cast, Corrosion resistant
Surface (hood/housing)	Powder-coated
Colour (hood/housing)	RAL 9005 (jet black)
Material (seal)	NBR
Material (locking)	Stainless steel
RoHS	compliant, compliant with exemption
RoHS exemptions	**6c:** Copper alloy containing up to 4 % lead by weight

Specifications and approvals

UL 1977 ECBT2.E235076
CSA-C22.2 No. 182.3 ECBT8.E235076
DNV GL

Hoods/housings for harsh outdoor environments
Screw locking

Identification	Cable entry	Part number	Drawing (dimensions in mm)
Han® HPR, Hoods, Special type, Top entry 	1x M63	19 40 024 0420	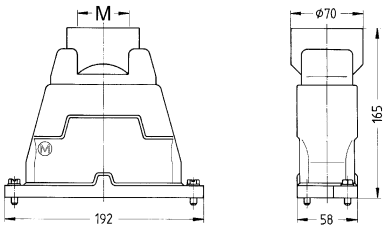
Han® HPR, Hoods, Top entry 	3x M25 3x M25, 1x M20	19 40 024 0461 19 40 024 0471	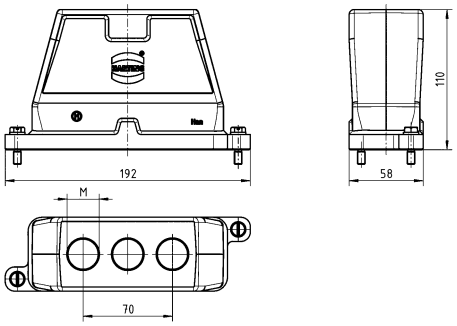
Han® HPR, Hoods, Special type, Angled entry 	3x M25	19 40 024 0631	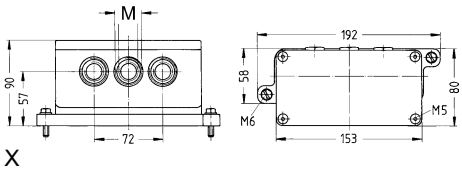
Han® HPR, Bulkhead mounted housings 		09 40 024 0311	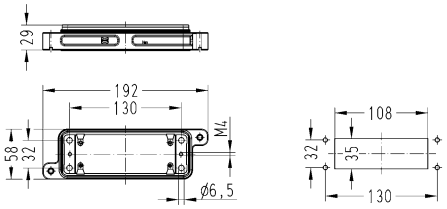

Identification	Cable entry	Part number	Drawing (dimensions in mm)
Han® HPR, Surface mounted housing, Horizontal version, Top entry 	1x M50 3x M25 3x M25, 1x M20	19 40 024 0914 19 40 024 0931 19 40 024 0971	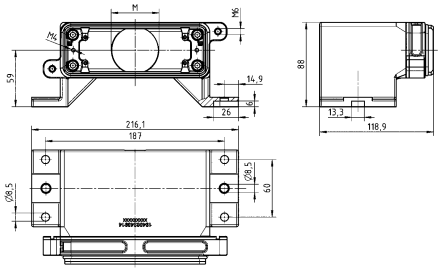
Han® HPR, Surface mounted housing, Top entry 	3x M25 3x M25, 1x M20	19 40 024 1231 19 40 024 1271	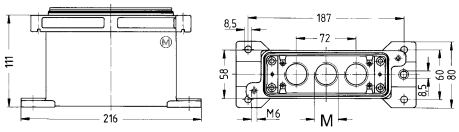

Features

- Contacts for fine stranded wire
- Low mating forces
- Suitable for HPR® hoods and housings

Technical characteristics

Rated current	250 A
Rated voltage	2000 V
Rated impulse voltage	12 kV
Pollution degree	3
Insulation resistance	≥10^{10} Ω
Contact resistance	≤0.3 mΩ
Limiting temperature	-40 ... +125 °C
Mating cycles	≥500
Wire outer diameter	≤18 mm
Material (insert)	Polycarbonate
Colour (insert)	RAL 7032 (pebble grey)
Material (contacts)	Copper alloy
Material flammability class acc. to UL 94	V-0
RoHS	compliant, compliant with exemption
RoHS exemptions	**6c:** Copper alloy containing up to 4 % lead by weight

Derating

Current carrying capacity

The current carrying capacity of the connectors is limited by the thermal load capability of the contact element material including the connections and the insulating parts. The derating curve is therefore valid for currents which flow constantly (non-intermittent) through each contact element of the connector evenly, without exceeding the allowed maximum temperature.

Measuring and testing techniques acc. to IEC 60512-5-2

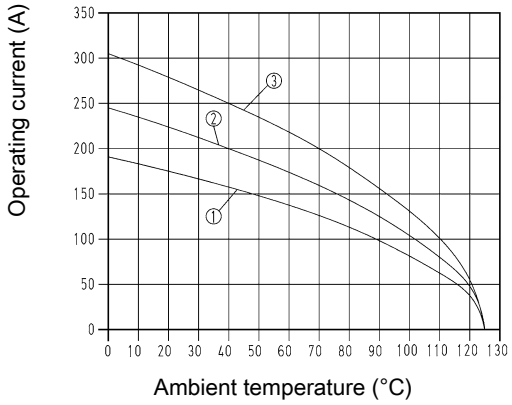

① Conductor cross-section 35 mm²
② Conductor cross-section 50 mm²
③ Conductor cross-section 70 mm²
4 contacts in Han® 24 HPR

Specifications and approvals

EN 60664-1
IEC 61984
EN 50124-1
DNV GL

Details

Removal tool 09 99 000 0332 see chapter 90

For more technical details (i.e. number of crimping operations or crimping position) see eCatalogue

Crimping tools see chapter 90

Remarks on the crimp technique

The wire gauges mentioned in the catalogue refer to geometric wire gauges of cables.

250 A 2.000 V 12 kV 3

Identification	Conductor cross-section (mm²)	Part number Male	Part number Female	Drawing (dimensions in mm)
Han® HC Modular, 250, Crimp termination  Please order crimp contacts separately.	10 ... 70	09 11 001 3021	09 11 001 3121	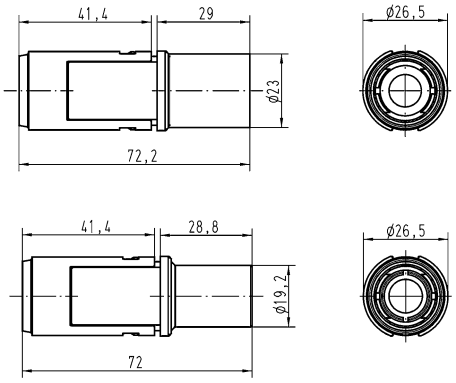
TC 250, Crimp contact, Contact surface: Silver plated 	10 16 25 35 50 70	09 11 000 6184 09 11 000 6185 09 11 000 6126 09 11 000 6127 09 11 000 6128 09 11 000 6129	09 11 000 6284 09 11 000 6285 09 11 000 6226 09 11 000 6227 09 11 000 6228 09 11 000 6229	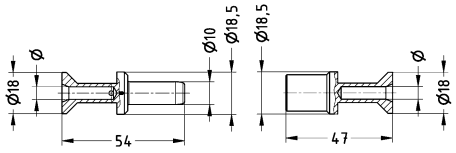
TC 250, Crimp contact, PE contact, Contact surface: Silver plated 	16 35	09 11 000 6190 09 11 000 6104	09 11 000 6290 09 11 000 6204	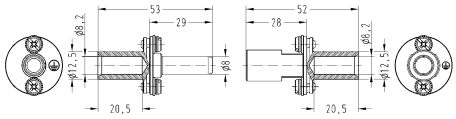

Conductor cross-section	Tool identification	Stripping length A	Ø
10 mm²	6	22 mm	4.3 mm
16 mm²	8	22 mm	5.5 mm
25 mm²	10	22 mm	7 mm
35 mm²	12	22 mm	8.45 mm
50 mm²	14	22 mm	10.25 mm
70 mm²	16	22 mm	11.75 mm
for stranded wire according to IEC 60 228 Class 5			

Crimp zone acc. to DIN 46235

Features

- Hoods/housings for harsh outdoor environments
- Metal hoods and housings with excellent corrosion resistance
- Corrosion resistance ASTM B117-09 (500 h)
- Excellent EMC characteristics
- Screw locking M6
- Field of application: for external electrical interconnections in vehicles, in highly demanding environments and wet areas, as well as for sensitive interconnections that have to be shielded

Technical characteristics

Limiting temperature	-40 ... +125 °C
Tightening torque (screw locking)	4 Nm
Degree of protection acc. to IEC 60529	IP65, IP68, IP69 / IPX9K acc. to ISO 20653
Type rating acc. to UL 50 / UL 50E	4, 4X, 12
Material (hood/housing)	Aluminium die-cast, Corrosion resistant
Surface (hood/housing)	Powder-coated
Colour (hood/housing)	RAL 9005 (jet black)
Material (seal)	NBR
Material (locking)	Stainless steel
Material (accessories)	Metal, Aluminium die-cast, Stainless steel, Aluminium
RoHS	compliant

Specifications and approvals

UL 1977 ECBT2.E235076
CSA-C22.2 No. 182.3 ECBT8.E235076
DNV GL

Hoods/housings for harsh outdoor environments
Screw locking

Identification	Cable entry	Part number	Drawing (dimensions in mm)
Han® HPR, Hoods, Top entry 	4x M20 4x M25	19 40 024 0473 19 40 024 0474	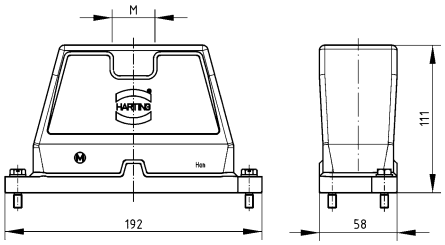
Han® HPR, Frame, for male inserts, 4x Han® HC Modular 250 		09 11 000 9925	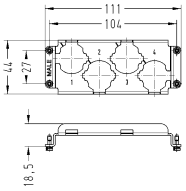 Tightening torque Fixing screws M3: 0.5 Nm
Han® HPR, Frame, for female inserts, 4x Han® HC Modular 250 		09 11 000 9942	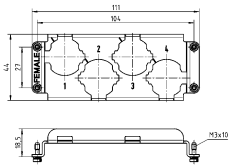 Tightening torque Fixing screws M3: 0.5 Nm

Hoods/housings for harsh outdoor environments
Screw locking

Identification	Cable entry	Part number	Drawing (dimensions in mm)
Han® HPR, Bulkhead mounted housings 		09 40 024 0311	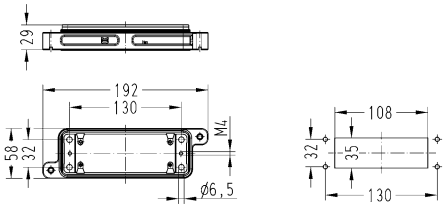
Han® HPR, Surface mounted housing, Horizontal version, Top entry 	4x M25	19 40 024 0941	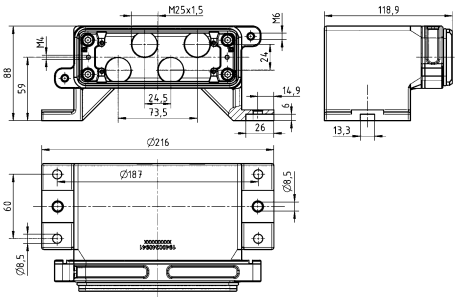
Han® HPR, Surface mounted housing, Top entry	4x M25	19 40 024 1242	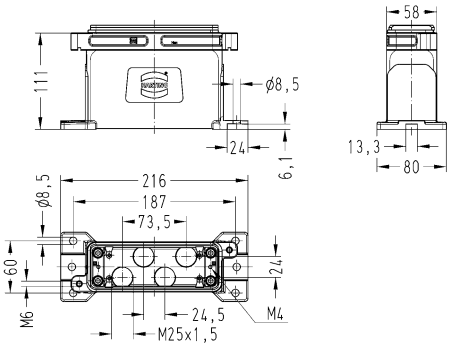

Identification	Cable entry	Part number	Drawing (dimensions in mm)
Mounting frames, Han® HPR, Thread M6 		09 40 000 9955	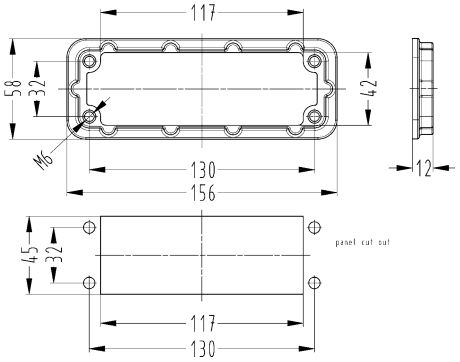
Han® HPR, Frame, for female inserts, 4x Han® HC Modular 250 		09 11 000 9926	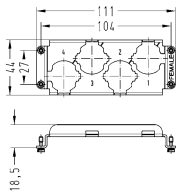 Tightening torque Fixing screws M3: 0.5 Nm
Han® HPR, Frame, for male inserts, 4x Han® HC Modular 250 		09 11 000 9941	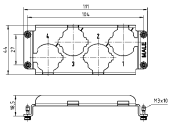 Tightening torque Fixing screws M3: 0.5 Nm

Hoods/housings for harsh outdoor environments
Screw locking

Identification	Cable entry	Part number	Drawing (dimensions in mm)
Han® HPR, Hoods, Enlarged, Top entry 	4x M25	19 40 016 0478	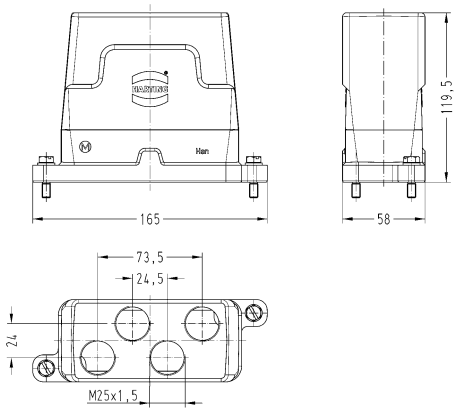
Han® HPR enlarged, Frame, for male inserts, 4x Han® HC Modular 250, Pack contents: 4x cheese-head screw M6 x 20, 4x washer SK S6 		09 11 000 9937	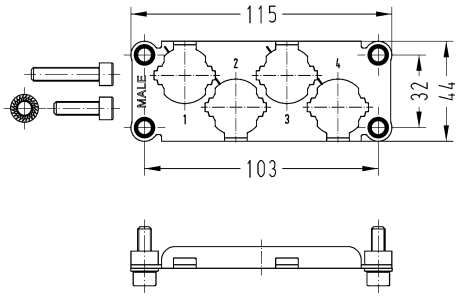 Tightening torque Fixing screws M6: 10 Nm

Hoods/housings for harsh outdoor environments
Screw locking

Identification	Cable entry	Part number	Drawing (dimensions in mm)
Han® HPR, Bulkhead mounted housings, Enlarged 		09 40 016 0368	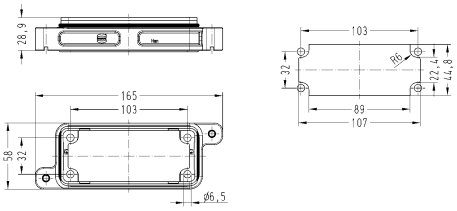
Han® HPR, Surface mounted housing, Horizontal version, Enlarged, Top entry 	4x M25	19 40 016 0978	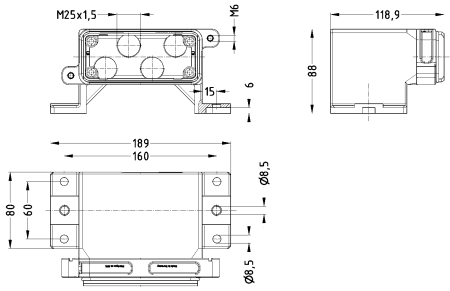
Mounting frames, Han® HPR, Thread M6 		09 40 000 9956	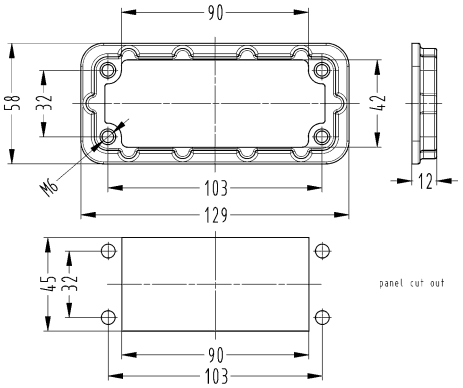
Han® HPR enlarged, Frame, for female inserts, 4x Han® HC Modular 250, Pack contents: 4x cheese-head screw M6 x 30, 4x washer SK S6 		09 11 000 9938	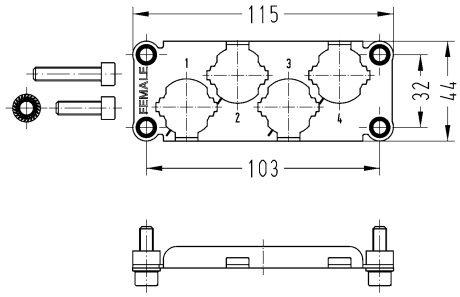 Tightening torque Fixing screws M6: 10 Nm

Hoods/housings for harsh outdoor environments
Screw locking

Identification	Cable entry	Part number	Drawing (dimensions in mm)
Han® HPR, Hoods, Enlarged, Top entry 	3x M32	19 40 024 0468	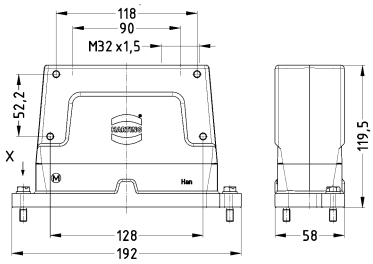
Han® HPR, Bulkhead mounted housings, Enlarged 		09 40 024 0368	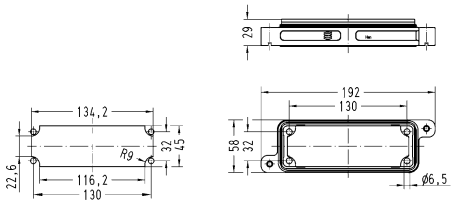
Han® HPR, Surface mounted housing, Horizontal version, Enlarged, Top entry  Bulkhead mounted housing 09 40 024 0368 not included, please order separately	3x M32	19 40 024 0968	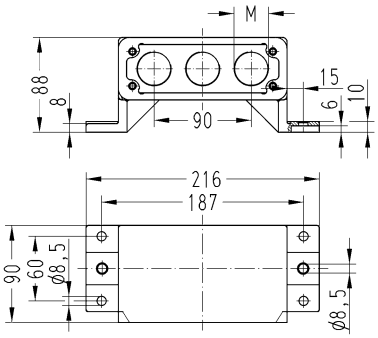
Mounting frames, Han® HPR, Thread M6 		09 40 000 9904	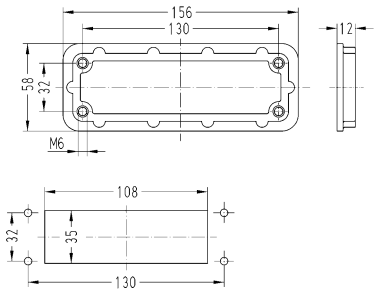 Panel cut out

Identification	Cable entry	Part number	Drawing (dimensions in mm)
Han® HPR enlarged, Frame, for male inserts, 3x Han® HC Modular 250, Pack contents: 4x cheese-head screw M6 x 20, 4x cheese-head screw M6 x 25, 4x washer SK S6 		09 11 000 9931	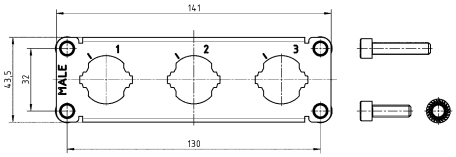 Tightening torque Fixing screw M6: 10 Nm
Han® HPR enlarged, Frame, for female inserts, 3x Han® HC Modular 250, Pack contents: 4x cheese-head screw M6 x 20, 4x cheese-head screw M6 x 25, 4x washer SK S6 		09 11 000 9932	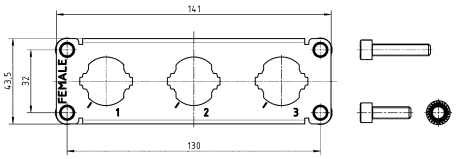 Tightening torque Fixing screw M6: 10 Nm

Hoods/housings for harsh outdoor environments
Screw locking

Identification	Cable entry	Part number	Drawing (dimensions in mm)
Han® HPR, Hoods, Enlarged, Top entry 	4x M25	19 40 024 0478	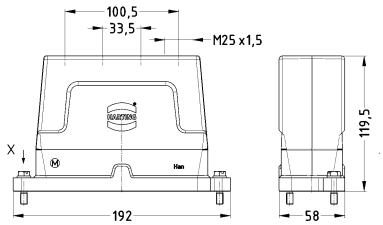
Han® HPR, Bulkhead mounted housings, Enlarged 		09 40 024 0368	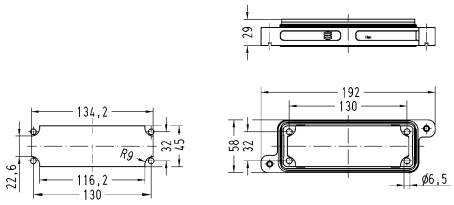
Han® HPR, Surface mounted housing, Horizontal version, Enlarged, Top entry  Bulkhead mounted housing 09 40 024 0368 not included, please order separately	4x M25	19 40 024 0978	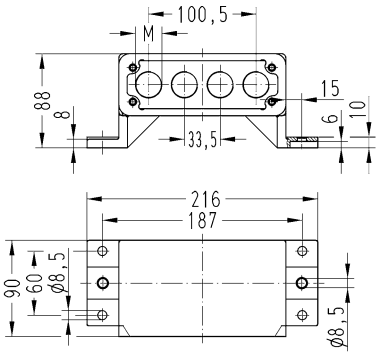
Mounting frames, Han® HPR, Thread M6 		09 40 000 9904	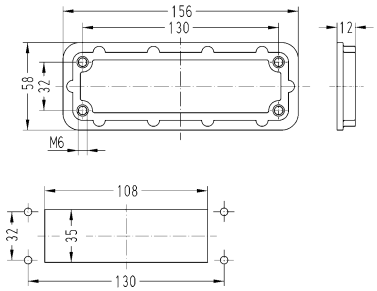 Panel cut out

Identification	Cable entry	Part number	Drawing (dimensions in mm)
Han® HPR enlarged, Frame, for male inserts, 4x Han® HC Modular 250, Pack contents: 4x cheese-head screw M6 x 20, 4x cheese-head screw M6 x 25, 4x washer SK S6 		09 11 000 9927	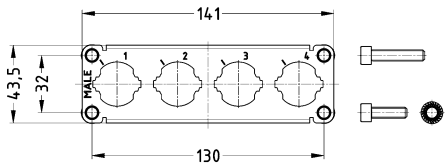 Tightening torque Fixing screws M6: 10 Nm
Han® HPR enlarged, Frame, for female inserts, 4x Han® HC Modular 250, Pack contents: 4x cheese-head screw M6 x 20, 4x cheese-head screw M6 x 25, 4x washer SK S6 		09 11 000 9928	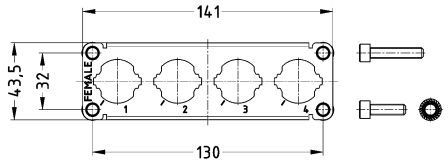 Tightening torque Fixing screws M6: 10 Nm
Han® HPR enlarged, Frame, for male inserts, 3x Han® HC Modular 250, Pack contents: 4x cheese-head screw M6 x 20, 4x cheese-head screw M6 x 30, 4x washer SK S6 		09 11 000 9943	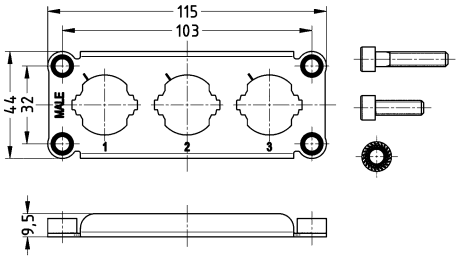
Han® HPR enlarged, Frame, for female inserts, 3x Han® HC Modular 250, Pack contents: 4x cheese-head screw M6 x 20, 4x cheese-head screw M6 x 30, 4x washer SK S6 		09 11 000 9944	

Features

- Contacts for fine stranded wire
- Low mating forces
- Suitable for HPR® hoods and housings
- UL approvals for axial-screw and screw termination

Technical characteristics

Rated current	350 A
Rated voltage	2000 V
Rated impulse voltage	12 kV
Pollution degree	3
Insulation resistance	≥10^{10} Ω
Contact resistance	≤0.3 mΩ, ≤0.2 mΩ
Limiting temperature	-40 ... +125 °C
Mating cycles	≥500
Wire outer diameter	≤22 mm, ≤19.5 mm
Material (insert)	Polycarbonate, Polyamide
Colour (insert)	RAL 7032 (pebble grey)
Material (contacts)	Copper alloy
Material flammability class acc. to UL 94	V-0
RoHS	compliant, compliant with exemption
RoHS exemptions	**6c:** Copper alloy containing up to 4 % lead by weight, **6a:** Lead as an alloying element in steel for machining purposes and in galvanised steel containing up to 0.35 % lead by weight

Derating

Current carrying capacity

The current carrying capacity of the connectors is limited by the thermal load capability of the contact element material including the connections and the insulating parts. The derating curve is therefore valid for currents which flow constantly (non-intermittent) through each contact element of the connector evenly, without exceeding the allowed maximum temperature.

Measuring and testing techniques acc. to IEC 60512-5-2

Crimp termination

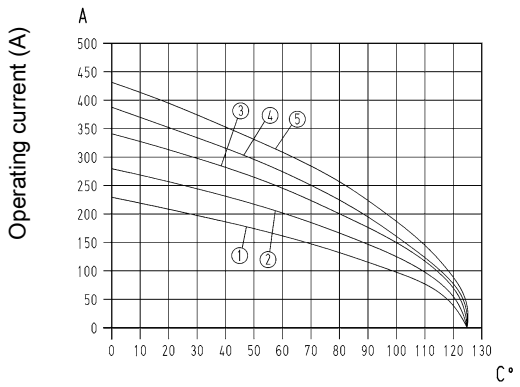

Ambient temperature (°C)

① Conductor cross-section 35 mm²
② Conductor cross-section 50 mm²
③ Conductor cross-section 70 mm²
④ Conductor cross-section 95 mm²
⑤ Conductor cross-section 120 mm²
Three contacts in Han® 24 HPR

Derating

Axial screw termination
Screw termination

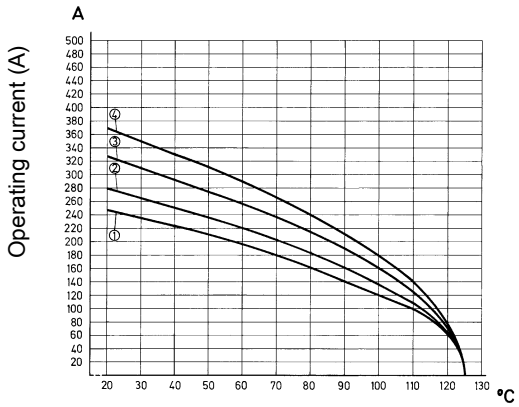

Ambient temperature (°C)

① Conductor cross-section 50 mm²
② Conductor cross-section 70 mm²
③ Conductor cross-section 95 mm²
④ Conductor cross-section 120 mm²
Three contacts in Han® 24 HPR

Specifications and approvals

EN 60664-1
IEC 61984
DNV GL
UL 1977 ECBT2.E235076

Details

Electrical data up to 350 A 4000 V 18 kV 3 by using a hexagonal adapter and the HARTING cable gland, in order to realise the clearance and creepage distance.

Contact resistance crimp contact: ≤ 0.3 mOhm

Contact resistance screw contact: ≤ 0.2 mOhm

Contact resistance axial screw contact: ≤ 0.2 mOhm

Remarks on the axial screw technique
The wire gauges mentioned in the catalogue refer to geometric wire gauges of cables.

Hex key (A/F 5) see chapter 90

For more technical details (i.e. number of crimping operations or crimping position) see eCatalogue

Crimping tools see chapter 90

Remarks on the crimp technique
The wire gauges mentioned in the catalogue refer to geometric wire gauges of cables.

350 A 2.000 V 12 kV 3

Identification	Conductor cross-section (mm²)	Part number Male	Part number Female	Drawing (dimensions in mm)
Han® HC Modular, 350, Crimp termination  Please order crimp contacts separately.	25 ... 120	09 11 001 3001	09 11 001 3101	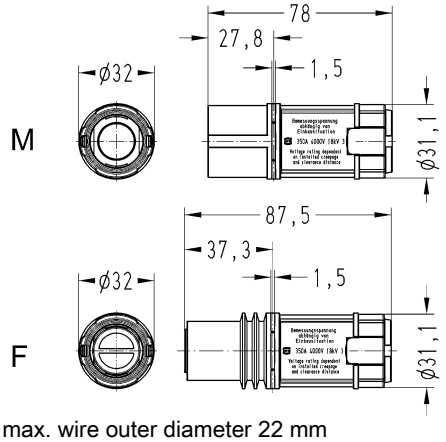 max. wire outer diameter 22 mm
TC 350, Crimp contact, Contact surface: Silver plated 	25 35 50 70 95 120	09 11 000 6139 09 11 000 6140 09 11 000 6141 09 11 000 6142 09 11 000 6143 09 11 000 6144	09 11 000 6239 09 11 000 6240 09 11 000 6241 09 11 000 6242 09 11 000 6243 09 11 000 6244	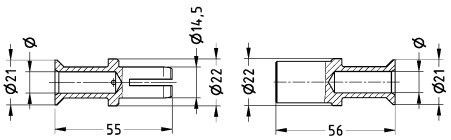

Wire gauge	Ø	Stripping length
25 mm²	7	26 mm
35 mm²	8.2	26 mm
50 mm²	10	28 mm
70 mm²	11.5	28 mm
95 mm²	13.5	30 mm
120 mm²	15.5	24 mm

for stranded wire according to IEC 60228 Class 5
Crimp zone acc. to DIN 46235

Identification	Conductor cross-section (mm²)	Part number Male	Part number Female	Drawing (dimensions in mm)
TC 350, Crimp contact, PE contact, Contact surface: Silver plated 	35	09 11 000 6172	09 11 000 6272	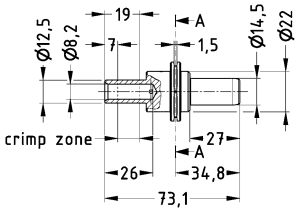 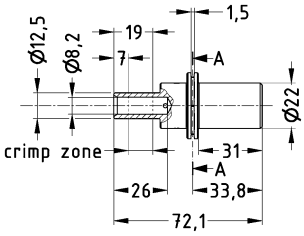

350 A 2.000 V 12 kV 3

Identification	Conductor cross-section (mm²)	Part number Male	Part number Female	Drawing (dimensions in mm)
Han® HC Modular, 350, Screw termination, Contact surface: Silver plated 	120	09 11 001 2655	09 11 001 2755	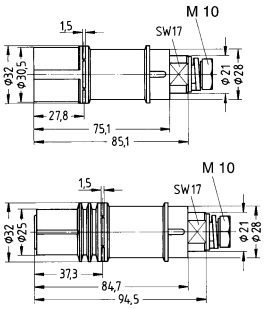 Tightening torque 14 Nm Cable shoe ≤ 120 mm² Please ensure to hold up the contact with a wrench size 17 to apply the tightening torque
TC 350, Screw contact, PE contact, Contact surface: Silver plated 	120	09 11 000 6158	09 11 000 6258	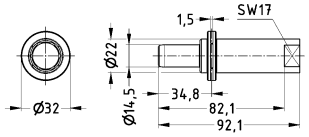 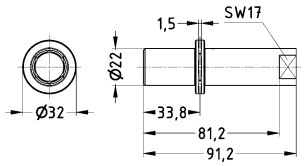 Tightening torque 14 Nm Cable shoe ≤ 120 mm² Please ensure to hold up the contact with a wrench size 17 to apply the tightening torque

350 A 2.000 V 12 kV 3

Identification	Conductor cross-section (mm²)	Part number Male	Part number Female	Drawing (dimensions in mm)
Han® HC Modular, 350, Axial screw termination, Contact surface: Silver plated 	35 ... 70 95 ... 120	09 11 001 2651 09 11 001 2652	09 11 001 2751 09 11 001 2752	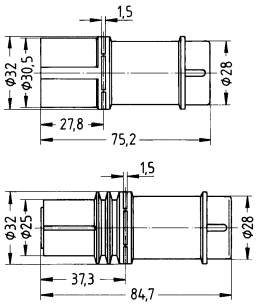 Tightening torque mm² 35 50 70 95 120 Nm 8 10 12 14 16 max. wire outer diameter 19.5 mm Stripping length 19...20 mm
TC 350, Axial screw contact, PE contact, Contact surface: Silver plated 	35 ... 70	09 11 000 6156	09 11 000 6256	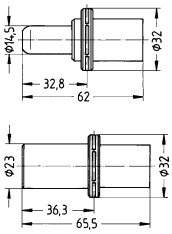 Tightening torque mm² 35 50 70 Nm 8 10 12 Stripping length 19...20 mm

Features

- Hoods/housings for harsh outdoor environments
- Metal hoods and housings with excellent corrosion resistance
- Corrosion resistance ASTM B117-09 (500 h)
- Excellent EMC characteristics
- Screw locking M6
- Field of application: for external electrical interconnections in vehicles, in highly demanding environments and wet areas, as well as for sensitive interconnections that have to be shielded
- Distinguishing feature: colour-coded black, internal seal

Technical characteristics

Limiting temperature	-40 ... +125 °C
Tightening torque (screw locking)	4 Nm
Degree of protection acc. to IEC 60529	IP65, IP68, IP69 / IPX9K acc. to ISO 20653
Type rating acc. to UL 50 / UL 50E	4, 4X, 12
Material (hood/housing)	Aluminium die-cast, Corrosion resistant
Surface (hood/housing)	Powder-coated
Colour (hood/housing)	RAL 9005 (jet black)
Material (seal)	NBR
Material (locking)	Stainless steel
Material (accessories)	Aluminium die-cast, Metal
RoHS	compliant, compliant with exemption
RoHS exemptions	**6c:** Copper alloy containing up to 4 % lead by weight

Specifications and approvals

UL 1977 ECBT2.E235076
CSA-C22.2 No. 182.3 ECBT8.E235076
DNV GL

Hoods/housings for harsh outdoor environments
Screw locking

Identification	Cable entry	Size	Part number	Drawing (dimensions in mm)
Han® HPR, Hoods, Top entry 	1x M25 1x M32		19 40 006 0411 19 40 006 0412	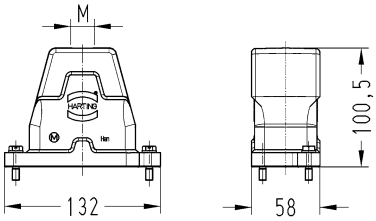
Han® HPR, Bulkhead mounted housings 			09 40 006 0311	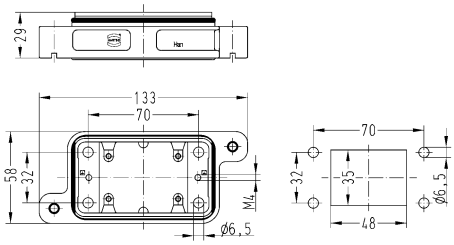
Han® HPR, Surface mounted housing, Horizontal version, Top entry 	1x M25 1x M40		19 40 006 0911 19 40 006 0913	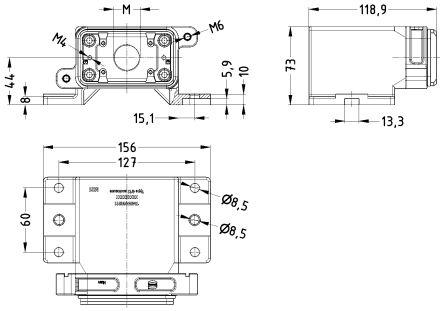
Mounting frames, Han® HPR, Thread M6 			09 40 000 9901	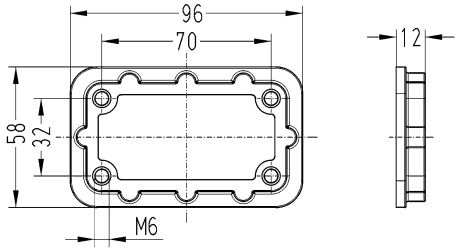

Identification	Cable entry	Size	Part number	Drawing (dimensions in mm)
Han® HPR, Frame, for male inserts, for female inserts, 1x Han® HC Modular 350 			09 11 000 9951	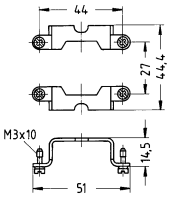 Tightening torque Fixing screws M3: 0.5 Nm
Hexagonal adapter, With O-ring  to reach the electrical data up to 4000 V 18 kV 3		M25 M32	19 36 000 5134 19 36 000 5135	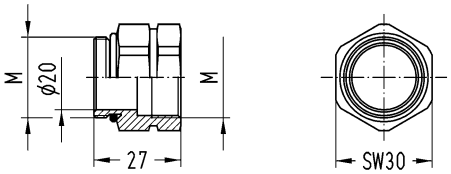

Hoods/housings for harsh outdoor environments
Screw locking

Identification	Cable entry	Size	Part number	Drawing (dimensions in mm)
Han® HPR, Hoods, Top entry 	2x M25		19 40 016 0431	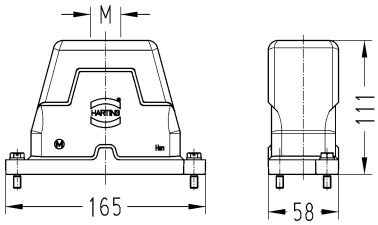
Han® HPR, Bulkhead mounted housings 			09 40 016 0311	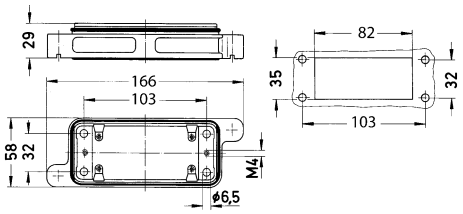
Mounting frames, Han® HPR, Thread M6 			09 40 000 9903	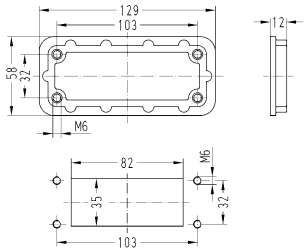 Panel cut out
Han® HPR, Frame, for male inserts, for female inserts, 2x Han® HC Modular 350 			09 11 000 9952	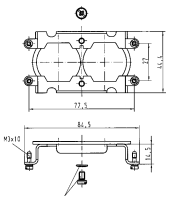 Tightening torque Fixing screws M3: 0.5 Nm Tightening torque Fixing screws M4: 1.5 Nm

Identification	Cable entry	Size	Part number	Drawing (dimensions in mm)
Hexagonal adapter, With O-ring  to reach the electrical data up to 4000 V 18 kV 3		M25	19 36 000 5134	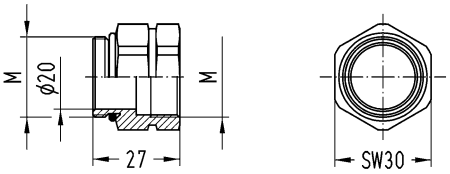

Hoods/housings for harsh outdoor environments
Screw locking

Identification	Cable entry	Size	Part number	Drawing (dimensions in mm)
Han® HPR, Hoods, Top entry 	2x M32		19 40 024 0432	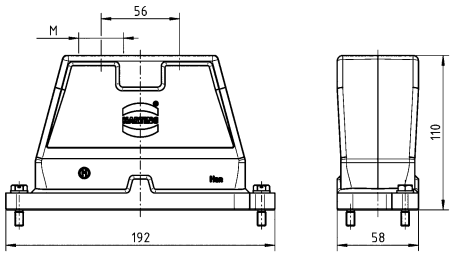
Han® HPR, Bulkhead mounted housings 			09 40 024 0311	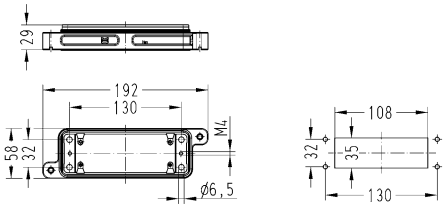
Mounting frames, Han® HPR, Thread M6 			09 40 000 9904	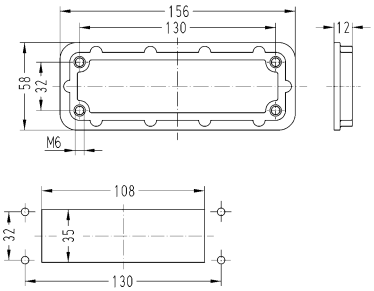 Panel cut out
Han® HPR, Frame, for male inserts, for female inserts, 2x Han® HC Modular 350 			09 11 000 9956	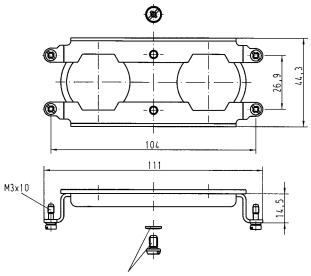 Tightening torque Fixing screws M3: 0.5 Nm Tightening torque Fixing screws M4: 1.5 Nm

Identification	Cable entry	Size	Part number	Drawing (dimensions in mm)
Hexagonal adapter, With O-ring  to reach the electrical data up to 4000 V 18 kV 3		M32	19 36 000 5135	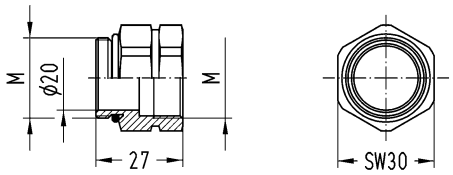

Hoods/housings for harsh outdoor environments
Screw locking

Identification	Cable entry	Size	Part number	Drawing (dimensions in mm)
Han® HPR, Hoods, Top entry 	3x M25		19 40 024 0461	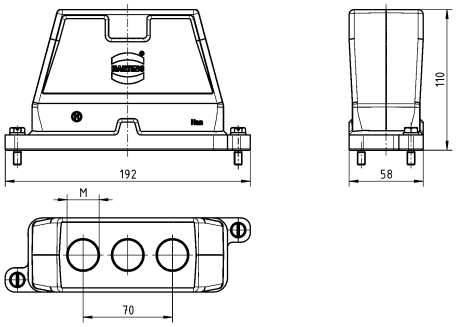
Han® HPR, Hoods, Top entry, High construction 	3x M32		19 40 024 0467	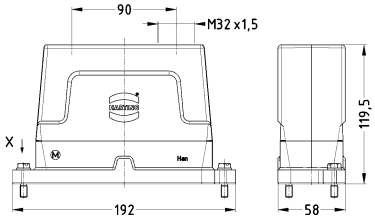
Han® HPR, Frame, for male inserts, for female inserts, 3x Han® HC Modular 350 			09 11 000 9963	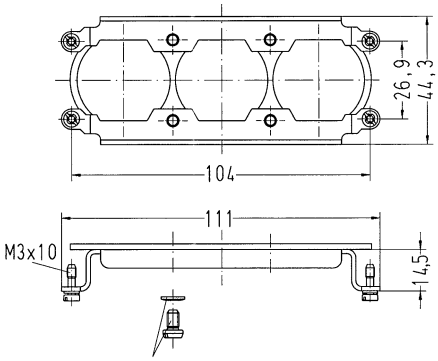 Tightening torque Fixing screws M3: 0.5 Nm Tightening torque Fixing screws M4: 1.5 Nm

Identification	Cable entry	Size	Part number	Drawing (dimensions in mm)
Hexagonal adapter, With O-ring  to reach the electrical data up to 4000 V 18 kV 3		M25 M32	19 36 000 5134 19 36 000 5135	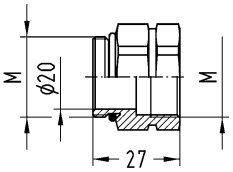 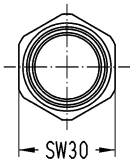

Hoods/housings for harsh outdoor environments
Screw locking

Identification	Cable entry	Size	Part number	Drawing (dimensions in mm)
Han® HPR, Bulkhead mounted housings 			09 40 024 0311	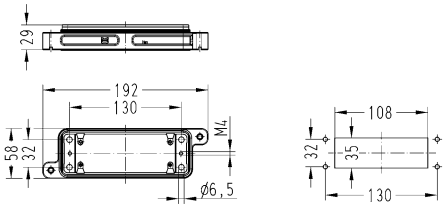
Han® HPR, Surface mounted housing, Horizontal version, Top entry 	3x M25		19 40 024 0931	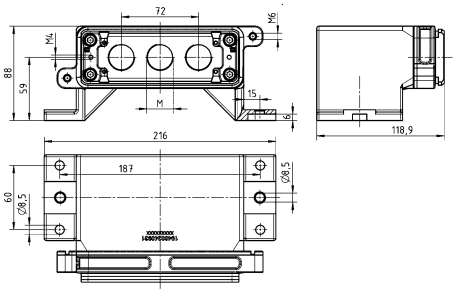
Han® HPR, Surface mounted housing, Top entry 	3x M25		19 40 024 1231	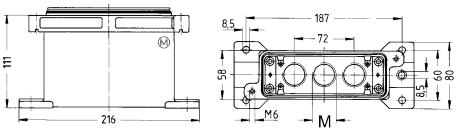
Mounting frames, Han® HPR, Thread M6 			09 40 000 9904	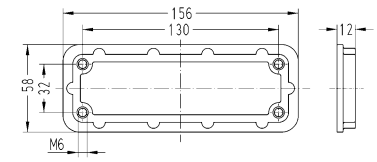 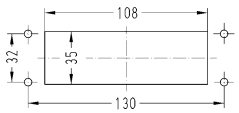 Panel cut out

Identification	Cable entry	Size	Part number	Drawing (dimensions in mm)
Han® HPR, Frame, for male inserts, for female inserts, 3x Han® HC Modular 350 			09 11 000 9963	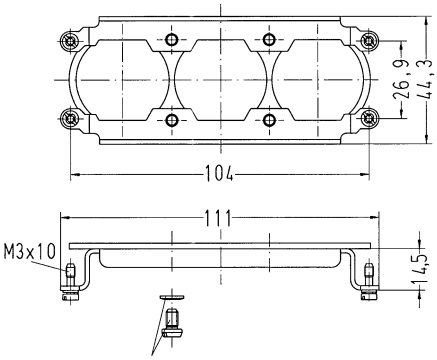 Tightening torque Fixing screws M3: 0.5 Nm Tightening torque Fixing screws M4: 1.5 Nm
Hexagonal adapter, With O-ring  to reach the electrical data up to 4000 V 18 kV 3		M25	19 36 000 5134	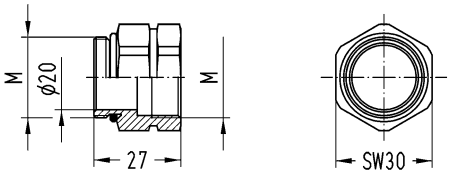

Hoods/housings for harsh outdoor environments
Screw locking

Identification	Cable entry	Size	Part number	Drawing (dimensions in mm)
Han® HPR, Hoods, Enlarged, Top entry 	3x M32		19 40 024 0468	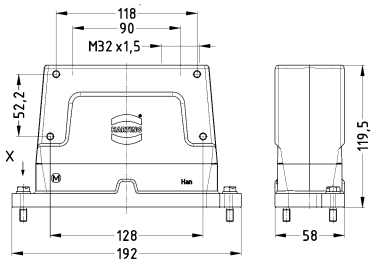
Han® HPR enlarged, Frame, for male inserts, 3x Han® HC Modular 350, Pack contents: 4x M4 screw, 4x washer SK S4, 4x washer SK S6, 4x cheese-head screw M6 x 20, 4x cheese-head screw M6 x 25 			09 11 000 9957	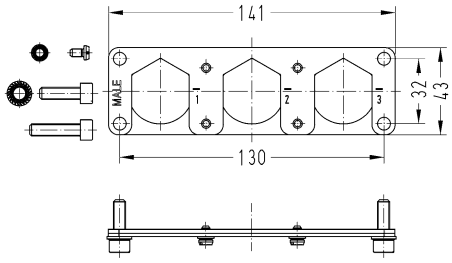 Tightening torque Fixing screws M6: 10 Nm Tightening torque Screws M4: 1.5 Nm
Han® HPR enlarged, Frame, for female inserts, 3x Han® HC Modular 350, Pack contents: 4x M4 screw, 4x washer SK S4, 4x washer SK S6, 4x cheese-head screw M6 x 20, 4x cheese-head screw M6 x 25 			09 11 000 9958	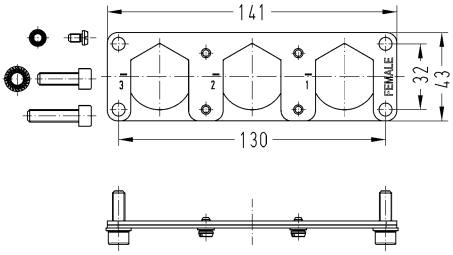 Tightening torque Fixing screws M6: 10 Nm Tightening torque Screws M4: 1.5 Nm
Hexagonal adapter, With O-ring  to reach the electrical data up to 4000 V 18 kV 3		M32	19 36 000 5135	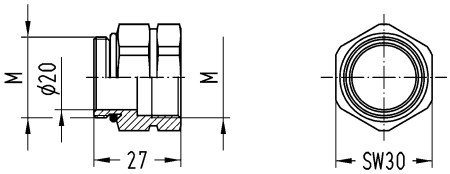

Hoods/housings for harsh outdoor environments
Screw locking

Identification	Cable entry	Part number	Drawing (dimensions in mm)
Han® HPR, Bulkhead mounted housings, Enlarged 		09 40 024 0368	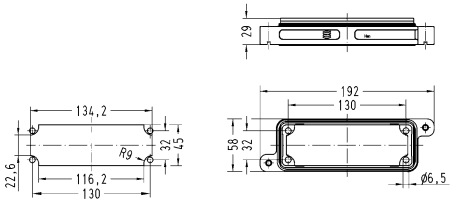
Han® HPR, Surface mounted housing, Horizontal version, Enlarged, Top entry  Bulkhead mounted housing 09 40 024 0368 not included, please order separately	3x M32	19 40 024 0968	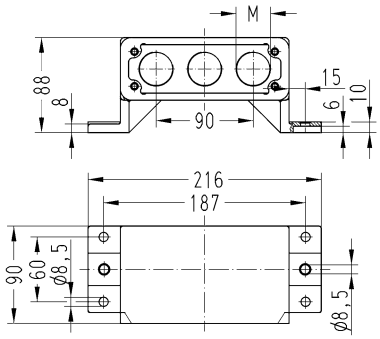
Mounting frames, Han® HPR, Thread M6 		09 40 000 9904	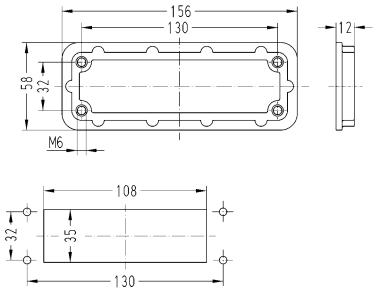 Panel cut out
Han® HPR enlarged, Frame, for male inserts, 3x Han® HC Modular 350, Pack contents: 4x M4 screw, 4x washer SK S4, 4x washer SK S6, 4x cheese-head screw M6 x 20, 4x cheese-head screw M6 x 25 		09 11 000 9957	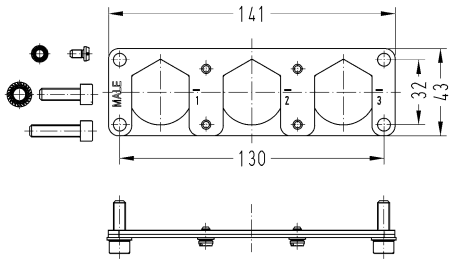 Tightening torque Fixing screws M6: 10 Nm Tightening torque Screws M4: 1.5 Nm

Identification	Cable entry	Part number	Drawing (dimensions in mm)
Han® HPR enlarged, Frame, for female inserts, 3x Han® HC Modular 350, Pack contents: 4x M4 screw, 4x washer SK S4, 4x washer SK S6, 4x cheese-head screw M6 x 20, 4x cheese-head screw M6 x 25 		09 11 000 9958	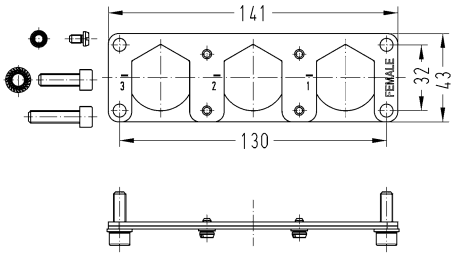 Tightening torque Fixing screws M6: 10 Nm Tightening torque Screws M4: 1.5 Nm

Hoods/housings for harsh outdoor environments
Screw locking

Identification	Cable entry	Size	Part number	Drawing (dimensions in mm)
Han® HPR, Hoods, Enlarged, Top entry 	4x M25		19 40 024 0478	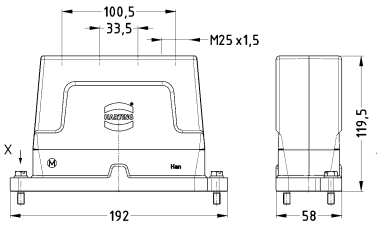
Han® HPR enlarged, Frame, for male inserts, 4x Han® HC Modular 350, Pack contents: 4x M4 screw, 4x washer SK S4, 4x washer SK S6, 4x cheese-head screw M6 x 20, 4x cheese-head screw M6 x 25, 4x heat shrink tube 			09 11 000 9964	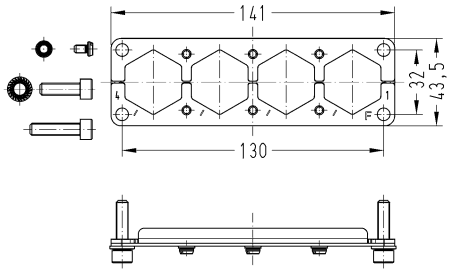 Tightening torque Fixing screws M6: 10 Nm Tightening torque Screws M4: 1.5 Nm
Han® HPR enlarged, Frame, for female inserts, 4x Han® HC Modular 350, Pack contents: 4x M4 screw, 4x washer SK S4, 4x washer SK S6, 4x cheese-head screw M6 x 20, 4x cheese-head screw M6 x 25, 4x heat shrink tube 			09 11 000 9965	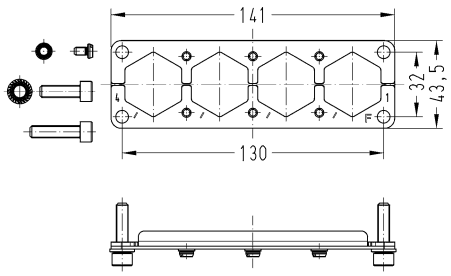 Tightening torque Fixing screws M6: 10 Nm Tightening torque Screws M4: 1.5 Nm
Hexagonal adapter, With O-ring  to reach the electrical data up to 4000 V 18 kV 3		M25	19 36 000 5134	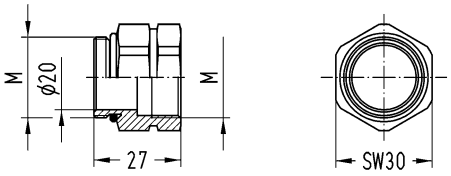

Hoods/housings for harsh outdoor environments
Screw locking

Identification	Cable entry	Part number	Drawing (dimensions in mm)
Han® HPR, Bulkhead mounted housings, Enlarged 		09 40 024 0368	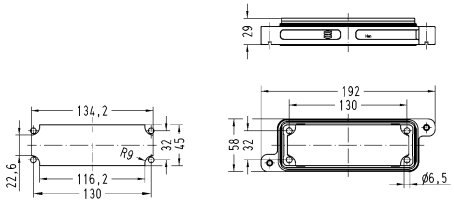
Han® HPR, Surface mounted housing, Horizontal version, Enlarged, Top entry  Bulkhead mounted housing 09 40 024 0368 not included, please order separately	4x M25	19 40 024 0978	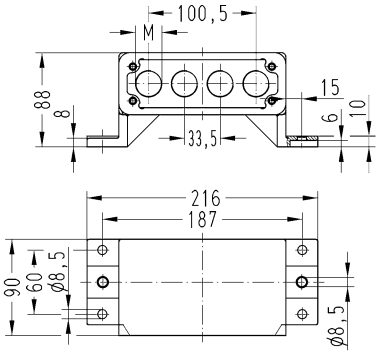
Mounting frames, Han® HPR, Thread M6 		09 40 000 9904	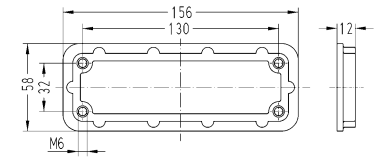 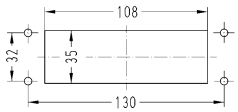 Panel cut out

Identification	Cable entry	Part number	Drawing (dimensions in mm)
Han® HPR enlarged, Frame, for male inserts, 4x Han® HC Modular 350, Pack contents: 4x M4 screw, 4x washer SK S4, 4x washer SK S6, 4x cheese-head screw M6 x 20, 4x cheese-head screw M6 x 25, 4x heat shrink tube 		09 11 000 9964	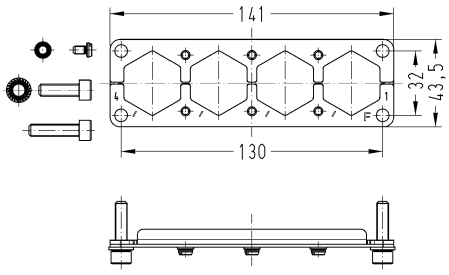 Tightening torque Fixing screws M6: 10 Nm Tightening torque Screws M4: 1.5 Nm
Han® HPR enlarged, Frame, for female inserts, 4x Han® HC Modular 350, Pack contents: 4x M4 screw, 4x washer SK S4, 4x washer SK S6, 4x cheese-head screw M6 x 20, 4x cheese-head screw M6 x 25, 4x heat shrink tube 		09 11 000 9965	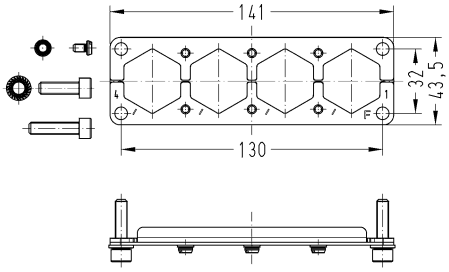 Tightening torque Fixing screws M6: 10 Nm Tightening torque Screws M4: 1.5 Nm

Han® M hoods/housings for Han® HC Modular 350

Features

- Hoods/housings for rough environments
- Metal hoods and housings with excellent corrosion resistance
- Corrosion resistance ASTM B117-09 (500 h)
- Locking lever made of high-quality stainless steel

Technical characteristics

Limiting temperature	-40 ... +125 °C
Degree of protection acc. to IEC 60529	IP65
Type rating acc. to UL 50 / UL 50E	4, 4X, 12
Material (hood/housing)	Aluminium die-cast
Surface (hood/housing)	Powder-coated
Colour (hood/housing)	RAL 9005 (jet black)
Material (seal)	FPM
Material (locking)	Stainless steel
Material (accessories)	Metal
RoHS	compliant

Specifications and approvals

UL 1977 ECBT2.E235076
CSA-C22.2 No. 182.3 ECBT8.E235076
DNV GL

Hoods/housings for rough environments
Single locking lever

Identification	Cable entry	Part number High construction	Drawing (dimensions in mm)
Han® M, Hoods, Top entry 	4x M25	19 37 048 0401	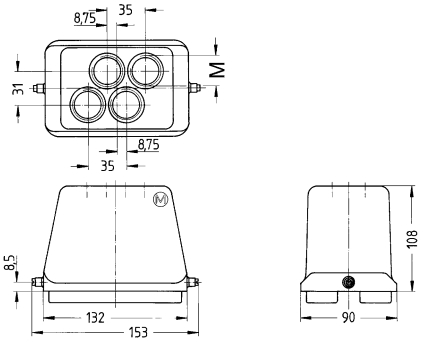
Han® M, Frame, for male inserts, for female inserts, 4x HC 350 contacts + 2x Han® Q 5/0 in a hood 		09 11 000 9954	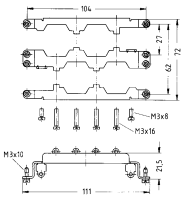 Tightening torque Fixing screws M3: 0.5 Nm Tightening torque Fixing screws Han® Q 5/0: 0.25 Nm Tightening torque Cross-tying screws 1.5 Nm

Hoods/housings for rough environments
Single locking lever

Identification	Part number Low construction	Drawing (dimensions in mm)
Han® M, Bulkhead mounted housings, With thermo-plastic cover 	09 37 048 0301	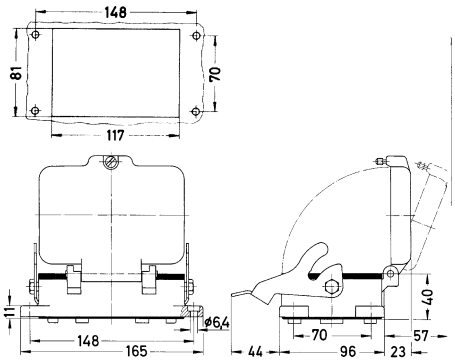
Han® M, Frame, for male inserts, for female inserts, 4x HC 350 contacts + 2x Han® Q 5/0 in a bulkhead mounted housing 	09 11 000 9955	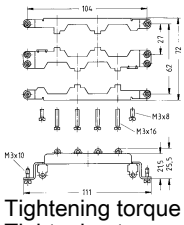 Tightening torque Fixing screws M3: 0.5 Nm Tightening torque Fixing screws Han® Q 5/0: 0.25 Nm Tightening torque Cross-tying screws 1.5 Nm

Features

- Contacts for fine stranded wire
- Low mating forces
- Suitable for HPR® hoods and housings
- UL approvals for axial-screw and screw termination

Technical characteristics

Rated current	650 A
Rated voltage	4000 V
Rated impulse voltage	18 kV
Pollution degree	3
Insulation resistance	≥10^{10} Ω
Contact resistance	≤0.3 mΩ, ≤0.2 mΩ
Limiting temperature	-40 ... +125 °C
Mating cycles	≥500
Wire outer diameter	≤27 mm, ≤32 mm @ 240 mm², ≤26.5 mm
Material (insert)	Polycarbonate, Polyamide
Colour (insert)	RAL 7032 (pebble grey)
Material (contacts)	Copper alloy
Material flammability class acc. to UL 94	V-0
RoHS	compliant, compliant with exemption
RoHS exemptions	**6c:** Copper alloy containing up to 4 % lead by weight, **6a:** Lead as an alloying element in steel for machining purposes and in galvanised steel containing up to 0.35 % lead by weight

Derating

Current carrying capacity

The current carrying capacity of the connectors is limited by the thermal load capability of the contact element material including the connections and the insulating parts. The derating curve is therefore valid for currents which flow constantly (non-intermittent) through each contact element of the connector evenly, without exceeding the allowed maximum temperature.

Measuring and testing techniques acc. to IEC 60512-5-2

Crimp termination

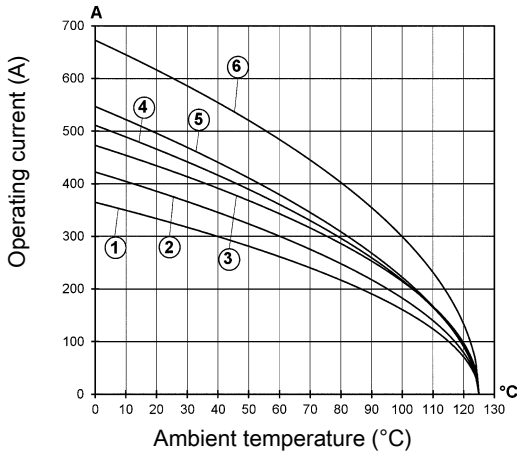

① Conductor cross-section 70 mm²
② Conductor cross-section 95 mm²
③ Conductor cross-section 120 mm²
④ Conductor cross-section 150 mm²
⑤ Conductor cross-section 185 mm²
⑥ Conductor cross-section 240 mm²

Screw termination / axial screw termination

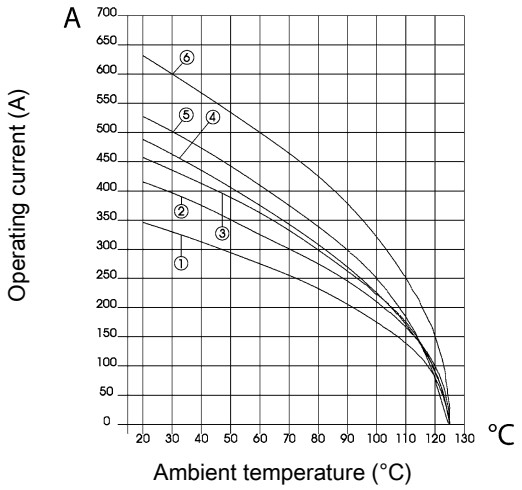

① Conductor cross-section 70 mm²
② Conductor cross-section 95 mm²
③ Conductor cross-section 120 mm²
④ Conductor cross-section 150 mm²
⑤ Conductor cross-section 185 mm²
⑥ Conductor cross-section 240 mm²

Specifications and approvals

EN 60664-1
IEC 61984
DNV GL
UL 1977 ECBT2.E235076

Details

Contact resistance crimp contact: ≤ 0.3 mOhm

Contact resistance screw contact: ≤ 0.2 mOhm

Contact resistance axial screw contact: ≤ 0.2 mOhm

Details

Remarks on the axial screw technique
The wire gauges mentioned in the catalogue refer to geometric wire gauges of cables.

Hex key (A/F 8) see chapter 90

For more technical details (i.e. number of crimping operations or crimping position) see eCatalogue

Crimping tools see chapter 90

Remarks on the crimp technique
The wire gauges mentioned in the catalogue refer to geometric wire gauges of cables.

650 A 4.000 V 18 kV 3

Identification	Conductor cross-section (mm²)	Part number Male	Part number Female	Drawing (dimensions in mm)
Han® HC Modular, 650, Crimp termination  Please order crimp contacts separately.	70 ... 240	09 11 001 3012	09 11 001 3112	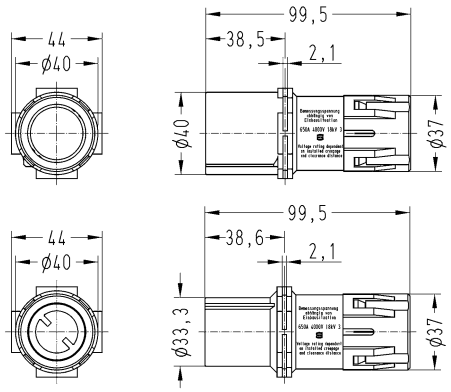 max. wire outer diameter 70...185 mm²: 27 mm max. wire outer diameter 240 mm²: 32 mm
TC 650, Crimp contact, Contact surface: Silver plated 	70 95 120 150 185 240	09 11 000 6161 09 11 000 6162 09 11 000 6163 09 11 000 6164 09 11 000 6165 09 11 000 6168	09 11 000 6261 09 11 000 6262 09 11 000 6263 09 11 000 6264 09 11 000 6265 09 11 000 6268	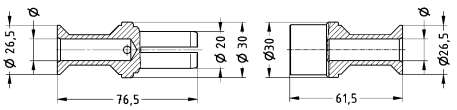

Conductor cross-section	ø	Stripping length
70 mm²	11.5	42 mm
95 mm²	13.5	42 mm
120 mm²	15.5	42 mm
150 mm²	17	42 mm
185 mm²	19	42 mm
240 mm²	21.5	46 mm
for stranded wire according to IEC 60228 Class 5		

Crimp zone acc. to DIN 46235

650 A 4.000 V 18 kV 3

Identification	Conductor cross-section (mm²)	Part number Male	Part number Female	Drawing (dimensions in mm)
Han® HC Modular, 650, Screw termination, Contact surface: Silver plated 	240	09 11 001 2675	09 11 001 2775	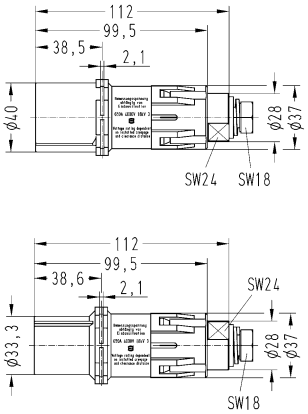 Tightening torque 16 ... 18 Nm Cable shoe ≤ 240 mm² Please ensure to hold up the contact with a wrench size 24 to apply the tightening torque
Han® HC Modular, 650, Axial screw termination, Contact surface: Silver plated 	70 ... 120 150 ... 185	09 11 001 2671 09 11 001 2672	09 11 001 2771 09 11 001 2772	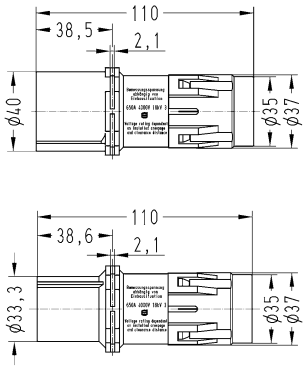 Tightening torque mm² 70 95 120 150 185 Nm 12 14 16 17 18 Stripping length 23 ... 25 mm max. wire outer diameter 26.5 mm

Features

- Hoods/housings for harsh outdoor environments
- Metal hoods and housings with excellent corrosion resistance
- Corrosion resistance ASTM B117-09 (500 h)
- Excellent EMC characteristics
- Screw locking M6
- Field of application: for external electrical interconnections in vehicles, in highly demanding environments and wet areas, as well as for sensitive interconnections that have to be shielded
- Distinguishing feature: colour-coded black, internal seal

Technical characteristics

Limiting temperature	-40 ... +125 °C
Tightening torque (screw locking)	4 Nm
Degree of protection acc. to IEC 60529	IP65, IP68, IP69 / IPX9K acc. to ISO 20653
Type rating acc. to UL 50 / UL 50E	4, 4X, 12
Material (hood/housing)	Aluminium die-cast, Corrosion resistant
Surface (hood/housing)	Powder-coated
Colour (hood/housing)	RAL 9005 (jet black)
Material (seal)	NBR
Material (locking)	Stainless steel
Material (accessories)	Metal, Aluminium die-cast
RoHS	compliant with exemption, compliant
RoHS exemptions	**6c:** Copper alloy containing up to 4 % lead by weight

Specifications and approvals

UL 1977 ECBT2.E235076
CSA-C22.2 No. 182.3 ECBT8.E235076
DNV GL

Hoods/housings for harsh outdoor environments
Screw locking

Identification	Cable entry	Part number	Drawing (dimensions in mm)
Han® HPR, Hoods, With adapter, Top entry 	1x M40	19 40 006 0418	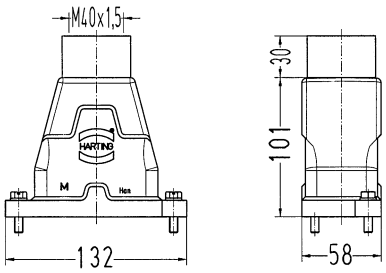
Han® HPR, Bulkhead mounted housings 		09 40 006 0314	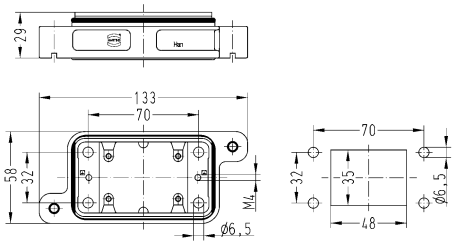
Han® HPR, Frame, for male inserts, for female inserts, 1x Han® HC Modular 650 		09 11 000 9971	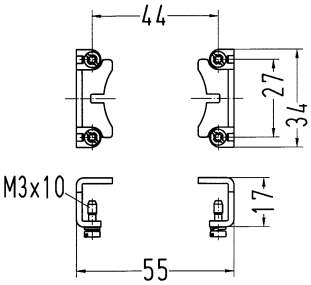 Tightening torque Fixing screws M3: 0.5 Nm

Hoods/housings for harsh outdoor environments
Screw locking

Identification	Cable entry	Part number	Drawing (dimensions in mm)
Han® HPR, Hoods, With adapter, Top entry 	2x M40	19 40 024 0438	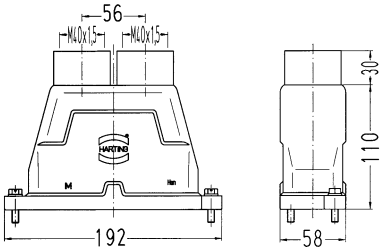
Han® HPR, Frame, for male inserts, for female inserts, 2x Han® HC Modular 650 		09 11 000 9972	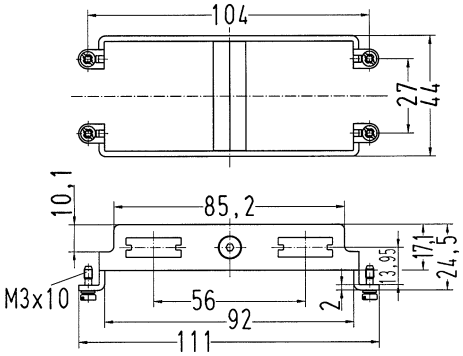 Tightening torque Fixing screws M3: 0.5 Nm Tightening torque M4: 1.5 Nm

Hoods/housings for harsh outdoor environments
Screw locking

Identification	Part number	Drawing (dimensions in mm)
Han® HPR, Bulkhead mounted housings 	09 40 024 0311	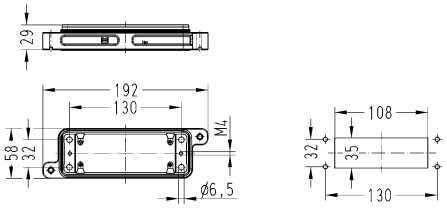
Mounting frames, Han® HPR, Thread M6 	09 40 000 9955	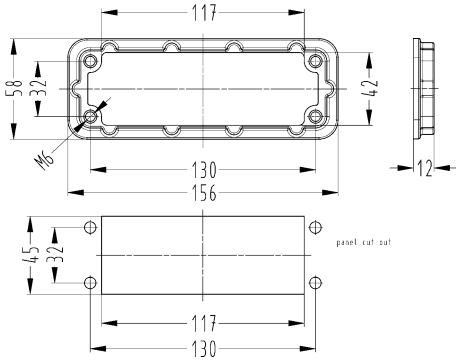
Han® HPR, Frame, for male inserts, for female inserts, 2x Han® HC Modular 650 	09 11 000 9972	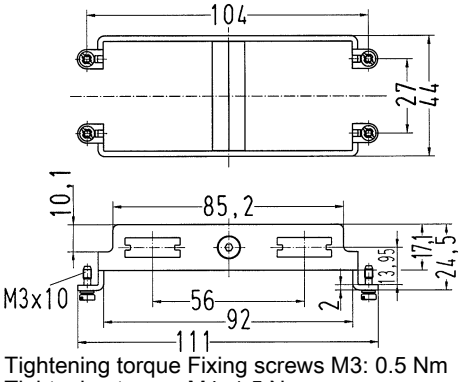 Tightening torque Fixing screws M3: 0.5 Nm Tightening torque M4: 1.5 Nm

Hoods/housings for harsh outdoor environments
Screw locking

Identification	Cable entry	Size	Part number	Drawing (dimensions in mm)
Han® HPR, Hoods, Enlarged, Top entry 	3x M32		19 40 024 0468	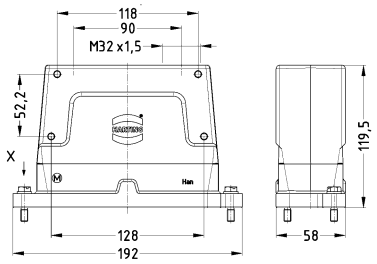
Han® HPR enlarged, Frame, for male inserts, 3x Han® HC Modular 650, Pack contents: 4x M4 screw, 4x washer SK S4, 4x washer SK S6, 4x cheese-head screw M6 x 20, 4x cheese-head screw M6 x 25 			09 11 000 9973	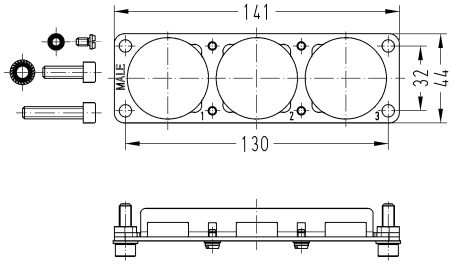 Tightening torque Fixing screws M6: 10 Nm Tightening torque Screws M4: 1.5 Nm
Han® HPR enlarged, Frame, for female inserts, 3x Han® HC Modular 650, Pack contents: 4x M4 screw, 4x washer SK S4, 4x washer SK S6, 4x cheese-head screw M6 x 20, 4x cheese-head screw M6 x 25 			09 11 000 9974	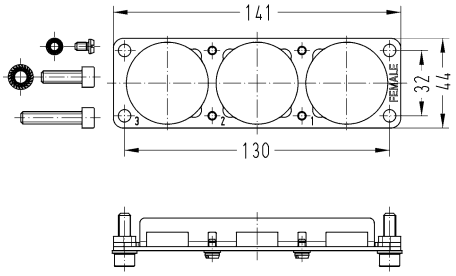 Tightening torque Fixing screws M6: 10 Nm Tightening torque Screws M4: 1.5 Nm
Hexagonal adapter, With O-ring  to reach the electrical data up to 4000 V 18 kV 3		M32	19 36 000 5135	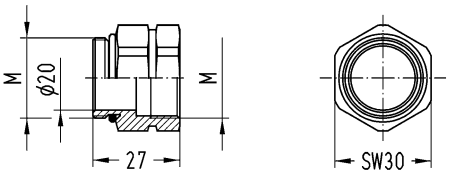

Hoods/housings for harsh outdoor environments
Screw locking

Identification	Cable entry	Size	Part number	Drawing (dimensions in mm)
Han® HPR, Bulkhead mounted housings, Enlarged 			09 40 024 0368	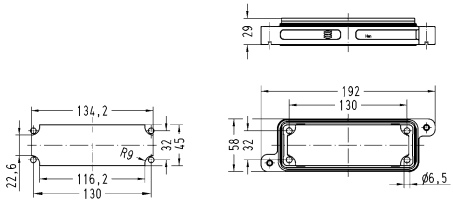
Han® HPR, Surface mounted housing, Horizontal version, Enlarged, Top entry  Bulkhead mounted housing 09 40 024 0368 not included, please order separately	3x M32		19 40 024 0968	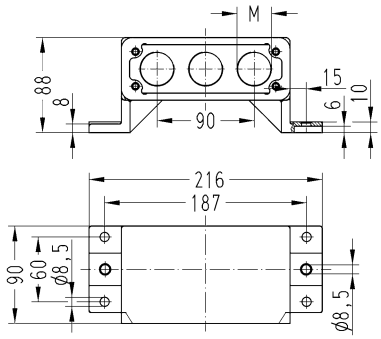
Mounting frames, Han® HPR, Thread M6 			09 40 000 9955	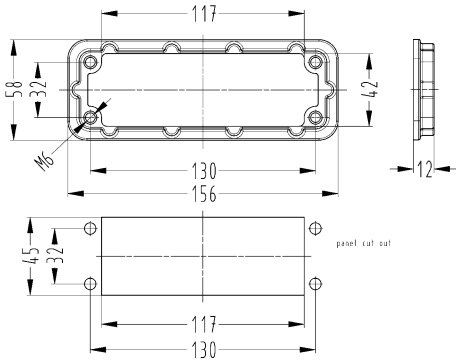
Han® HPR enlarged, Frame, for male inserts, 3x Han® HC Modular 650, Pack contents: 4x M4 screw, 4x washer SK S4, 4x washer SK S6, 4x cheese-head screw M6 x 20, 4x cheese-head screw M6 x 25 			09 11 000 9973	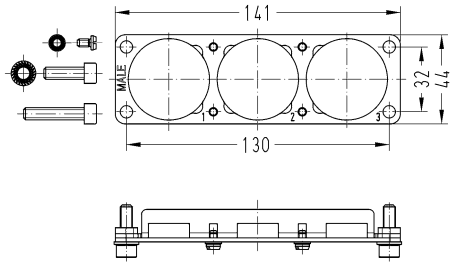 Tightening torque Fixing screws M6: 10 Nm Tightening torque Screws M4: 1.5 Nm

Identification	Cable entry	Size	Part number	Drawing (dimensions in mm)
Han® HPR enlarged, Frame, for female inserts, 3x Han® HC Modular 650, Pack contents: 4x M4 screw, 4x washer SK S4, 4x washer SK S6, 4x cheese-head screw M6 x 20, 4x cheese-head screw M6 x 25 			09 11 000 9974	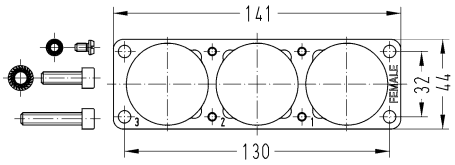 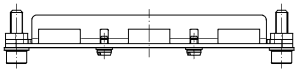 Tightening torque Fixing screws M6: 10 Nm Tightening torque Screws M4: 1.5 Nm
Hexagonal adapter, With O-ring  to reach the electrical data up to 4000 V 18 kV 3		M32	19 36 000 5135	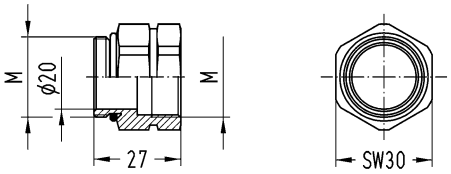

Features

- Hoods/Housings for higher EMC requirements
- Easy assembly due to split hood and surface mounted housing
- Many assembly possibilities due to separate assembly panels
- External termination of PE termination on hood and surface mounted housing
- Ideal motor/drive connector for transportation sector
- Secure and a visible connection of screening braid of shielded cables
- Devided hood/housing ensures a user-friendly assembly process and simple inspection of the cable and screen connections on the “open system”
- More wiring space in comparison to the standard Han® HPR hoods and housings, ideally suitable for wagon couplings in the railway sector
- Use of standard inserts or Han-Modular® hinged frames
- Compatible with standard Han® HPR bulkhead mounted housings
- Shield connection and/or strain relief possible within the hood/housing

Technical characteristics

Limiting temperature	-40 ... +125 °C
Tightening torque (screw locking)	4 Nm
Degree of protection acc. to IEC 60529	IP65, IP68, IP69 / IPX9K acc. to ISO 20653
Type rating acc. to UL 50 / UL 50E	4, 4X, 12
Material (hood/housing)	Aluminium die-cast, Corrosion resistant
Surface (hood/housing)	Powder-coated
Colour (hood/housing)	RAL 9005 (jet black)
Material (seal)	NBR
Material (locking)	Stainless steel
Material (accessories)	Stainless steel, Metal, Aluminium die-cast
RoHS	compliant

Specifications and approvals

UL 1977 ECBT2.E235076
CSA-C22.2 No. 182.3 ECBT8.E235076
DNV GL

Details

Insertion / Removal tool 09 99 000 0334 for shielding clamps see chapter 90

Hoods/housings for harsh outdoor environments
Screw locking

Identification	Cable entry	Part number	Drawing (dimensions in mm)
Han® HPR EasyCon, Hoods 		09 40 024 0451	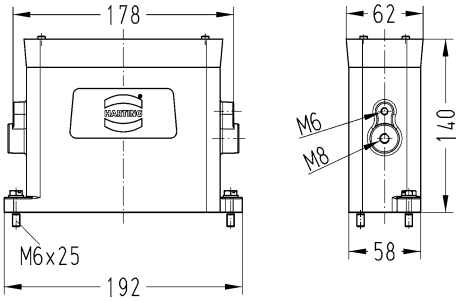 Tightening torque Cover locking 6 Nm Tightening torque External PE 15 Nm
Han® HPR EasyCon, Hoods, Low construction 		09 40 024 0454	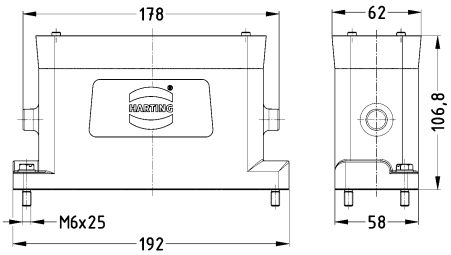
Han® HPR EasyCon, Surface mounted housing 		09 40 024 0951	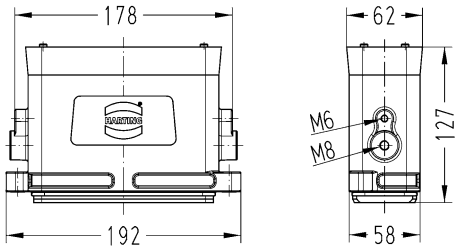 Tightening torque Cover locking 6 Nm Tightening torque External PE 15 Nm

Identification	Cable entry	Part number	Drawing (dimensions in mm)
Han® HPR EasyCon, Mounting cover, for surface mounted housings, for hoods 	3x M25 3x M32 4x M25	19 40 024 9901 19 40 024 9903 19 40 024 9902	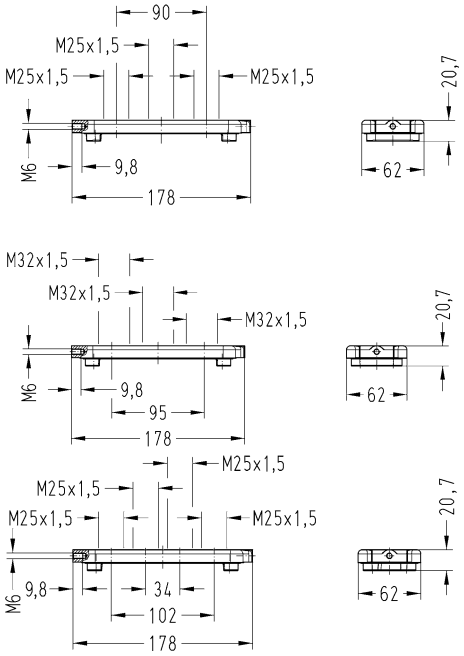
Han® HPR EasyCon, Mounting panel, Long version, for hoods, for surface mounted housings, Pack contents: 6x M6 screw, 6x washer SK S6 		09 40 000 9925	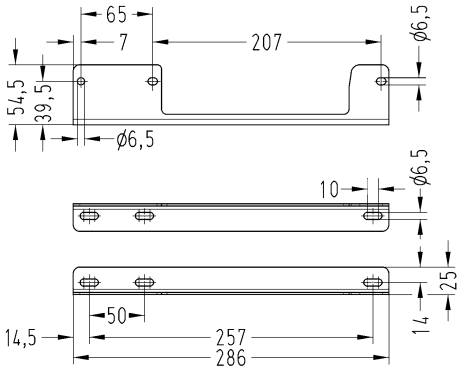 Tightening torque Fixing screws M6: 6 Nm
Han® HPR EasyCon, Mounting panel, Short version, for hoods, for surface mounted housings, Pack contents: 4x M6 screw, 4x washer SK S6 		09 40 000 9926	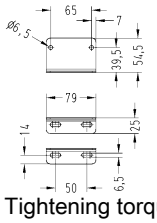 Tightening torque Fixing screws M6: 6 Nm

Identification	Cable entry	Part number	Drawing (dimensions in mm)
Han® HPR EasyCon, Frame, for male inserts, 4x Han® HC Modular 250, Pack contents: 2x distance bolt (SW 7), 2x M4 screw, 2x washer SK S4 		09 40 024 9903	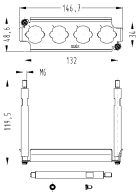 Tightening torque Distance bolt 6 Nm Tightening torque Fixing screws M4: 1.5 Nm
Han® HPR EasyCon, Frame, for female inserts, 4x Han® HC Modular 250, Pack contents: 2x distance bolt (SW 7), 2x M4 screw, 2x washer SK S4 		09 40 024 9904	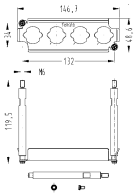 Tightening torque Distance bolt 6 Nm Tightening torque Fixing screws M4: 1.5 Nm
Han® HPR EasyCon, Frame, for male inserts, 3x Han® HC Modular 350, Pack contents: 2x distance bolt (A/F 7), 4x M4 screw, 4x washer SK S4 		09 40 024 9911	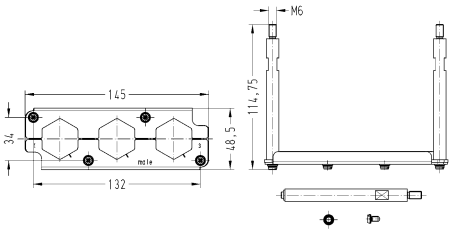 Tightening torque Distance bolt 6 Nm Tightening torque Fixing screws M4: 1.5 Nm
Han® HPR EasyCon, Frame, for female inserts, 3x Han® HC Modular 350, Pack contents: 2x distance bolt (A/F 7), 4x M4 screw, 4x washer SK S4 		09 40 024 9912	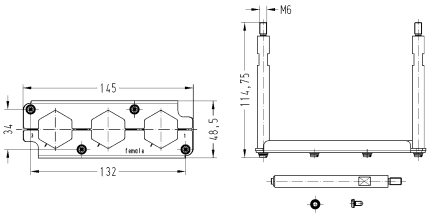 Tightening torque Distance bolt 6 Nm Tightening torque Fixing screws M4: 1.5 Nm
Han® HPR EasyCon, Frame, for male inserts, 4x Han® HC Modular 350, Pack contents: 2x distance bolt (A/F 7), 4x M4 screw, 4x washer SK S4, 4x heat shrink tube 		09 40 024 9913	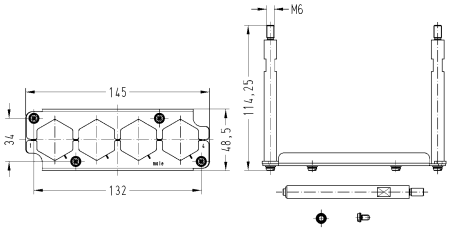 Tightening torque Distance bolt 6 Nm Tightening torque Fixing screws M4: 1.5 Nm

Identification	Cable entry	Part number	Drawing (dimensions in mm)
Han® HPR EasyCon, Frame, for female inserts, 4x Han® HC Modular 350, Pack contents: 2x distance bolt (A/F 7), 4x M4 screw, 4x washer SK S4, 4x heat shrink tube 		09 40 024 9914	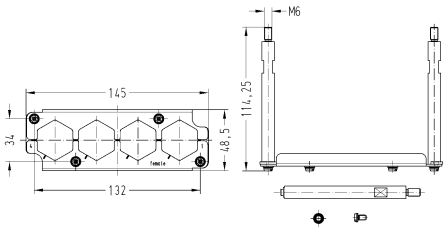 Tightening torque Distance bolt 6 Nm Tightening torque Fixing screws M4: 1.5 Nm
Han® HPR EasyCon, Frame, for male inserts, 3x Han® HC Modular 650, Pack contents: 2x distance bolt (A/F 7), 2x M4 screw, 2x washer SK S4, 2x M4 countersunk screw 		09 40 024 9921	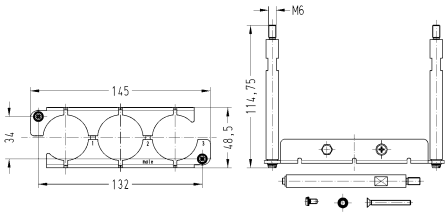 Tightening torque Distance bolt 6 Nm Tightening torque Fixing screws M4: 1.5 Nm Tightening torque M4: 1.5 Nm
Han® HPR EasyCon, Frame, for female inserts, 3x Han® HC Modular 650, Pack contents: 2x distance bolt (A/F 7), 2x M4 screw, 2x washer SK S4, 2x M4 countersunk screw 		09 40 024 9922	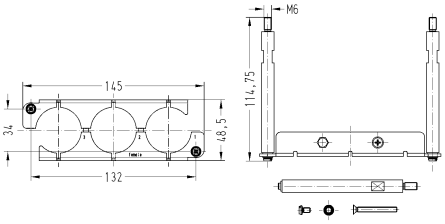 Tightening torque Distance bolt 6 Nm Tightening torque Fixing screws M4: 1.5 Nm Tightening torque M4: 1.5 Nm
Han® HPR EasyCon, Frame, for up to 8 single modules, A … H, Pack contents: 2x M4/M5 distance bolts (A/F 7), 2x M5/M6 distance bolts (A/F 7), 4x M4 screw, 4x washer SK S4 		09 40 024 9931	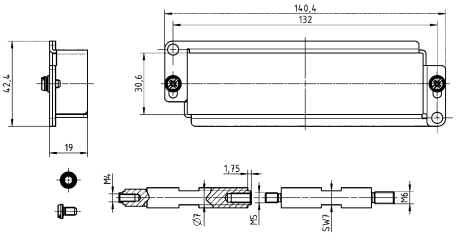 Tightening torque Distance bolt 6 Nm Tightening torque Fixing screws M4: 1.5 Nm Tightening torque M4: 1.5 Nm

Identification	Cable entry	Part number	Drawing (dimensions in mm)
Han® HPR EasyCon, Frame, for up to 8 single modules, a … h, Pack contents: 2x M4/M5 distance bolts (A/F 7), 2x M5/M6 distance bolts (A/F 7), 4x M4 screw, 4x washer SK S4 		09 40 024 9932	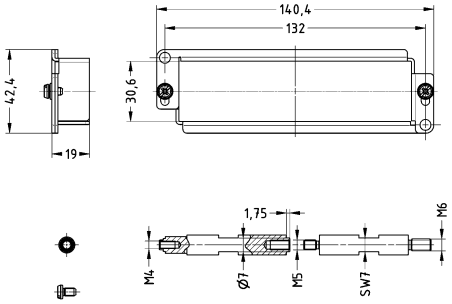 Tightening torque Distance bolt 6 Nm Tightening torque Fixing screws M4: 1.5 Nm Tightening torque M4: 1.5 Nm

Hoods/housings for harsh outdoor environments
Screw locking

Identification	Part number	Drawing (dimensions in mm)
Han® HPR, Bulkhead mounted housings, Enlarged 	09 40 024 0368	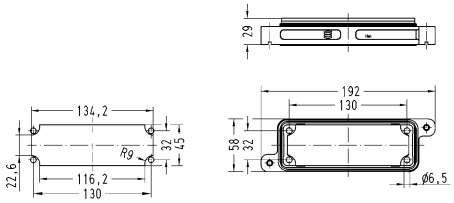
Mounting frames, Han® HPR, Thread M6 	09 40 000 9955	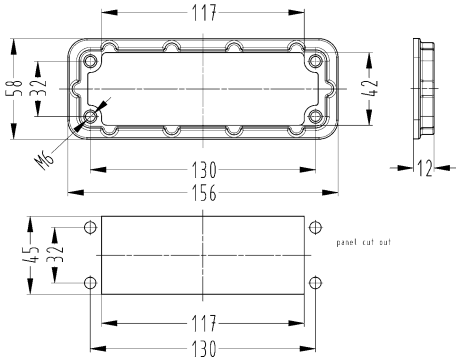
Han® HPR enlarged, Frame, for male inserts, 4x Han® HC Modular 250, Pack contents: 4x cheese-head screw M6 x 20, 4x cheese-head screw M6 x 25, 4x washer SK S6 	09 11 000 9927	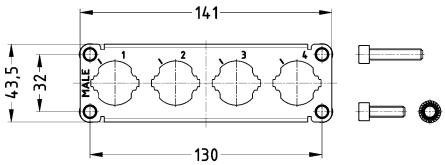 Tightening torque Fixing screws M6: 10 Nm
Han® HPR enlarged, Frame, for female inserts, 4x Han® HC Modular 250, Pack contents: 4x cheese-head screw M6 x 20, 4x cheese-head screw M6 x 25, 4x washer SK S6 	09 11 000 9928	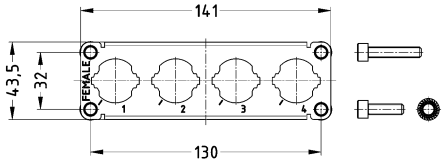 Tightening torque Fixing screws M6: 10 Nm

Identification		Part number	Drawing (dimensions in mm)
Han® HPR enlarged, Frame, for male inserts, 3x Han® HC Modular 250, Pack contents: 4x cheese-head screw M6 x 20, 4x cheese-head screw M6 x 25, 4x washer SK S6		09 11 000 9931	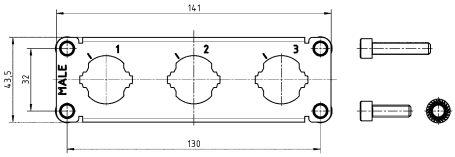 Tightening torque Fixing screw M6: 10 Nm
Han® HPR enlarged, Frame, for female inserts, 3x Han® HC Modular 250, Pack contents: 4x cheese-head screw M6 x 20, 4x cheese-head screw M6 x 25, 4x washer SK S6		09 11 000 9932	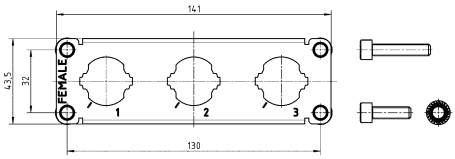 Tightening torque Fixing screw M6: 10 Nm
Han® HPR enlarged, Frame, for male inserts, 3x Han® HC Modular 250, Pack contents: 4x cheese-head screw M6 x 20, 4x cheese-head screw M6 x 30, 4x washer SK S6		09 11 000 9943	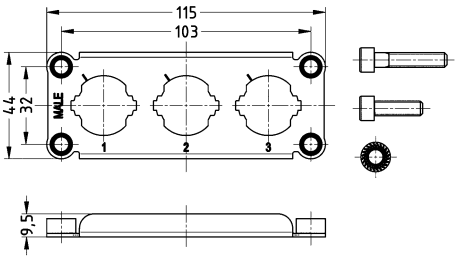
Han® HPR enlarged, Frame, for female inserts, 3x Han® HC Modular 250, Pack contents: 4x cheese-head screw M6 x 20, 4x cheese-head screw M6 x 30, 4x washer SK S6		09 11 000 9944	
Han® HPR enlarged, Frame, for male inserts, 3x Han® HC Modular 350, Pack contents: 4x M4 screw, 4x washer SK S4, 4x washer SK S6, 4x cheese-head screw M6 x 20, 4x cheese-head screw M6 x 25		09 11 000 9957	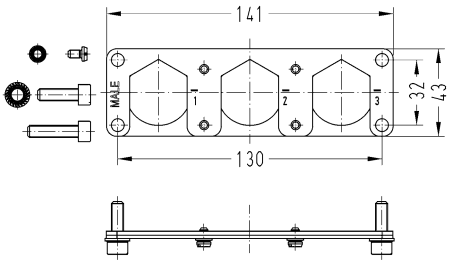 Tightening torque Fixing screws M6: 10 Nm Tightening torque Screws M4: 1.5 Nm

Identification	Part number	Drawing (dimensions in mm)
Han® HPR enlarged, Frame, for female inserts, 3x Han® HC Modular 350, Pack contents: 4x M4 screw, 4x washer SK S4, 4x washer SK S6, 4x cheese-head screw M6 x 20, 4x cheese-head screw M6 x 25 	09 11 000 9958	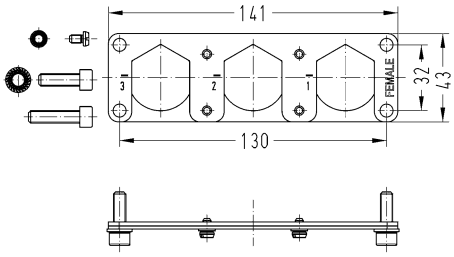 Tightening torque Fixing screws M6: 10 Nm Tightening torque Screws M4: 1.5 Nm
Han® HPR enlarged, Frame, for male inserts, 4x Han® HC Modular 350, Pack contents: 4x M4 screw, 4x washer SK S4, 4x washer SK S6, 4x cheese-head screw M6 x 20, 4x cheese-head screw M6 x 25, 4x heat shrink tube 	09 11 000 9964	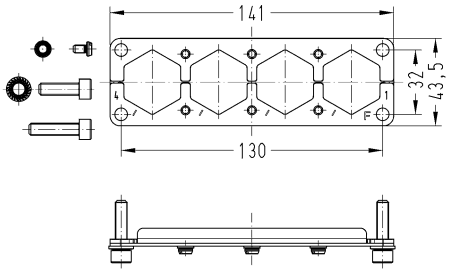 Tightening torque Fixing screws M6: 10 Nm Tightening torque Screws M4: 1.5 Nm
Han® HPR enlarged, Frame, for female inserts, 4x Han® HC Modular 350, Pack contents: 4x M4 screw, 4x washer SK S4, 4x washer SK S6, 4x cheese-head screw M6 x 20, 4x cheese-head screw M6 x 25, 4x heat shrink tube 	09 11 000 9965	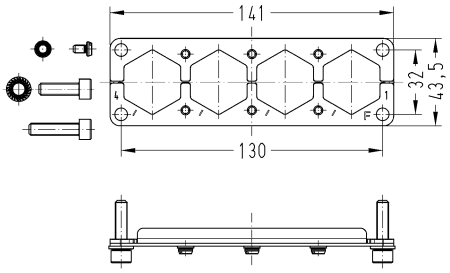 Tightening torque Fixing screws M6: 10 Nm Tightening torque Screws M4: 1.5 Nm
Han® HPR enlarged, Frame, for male inserts, 3x Han® HC Modular 650, Pack contents: 4x M4 screw, 4x washer SK S4, 4x washer SK S6, 4x cheese-head screw M6 x 20, 4x cheese-head screw M6 x 25 	09 11 000 9973	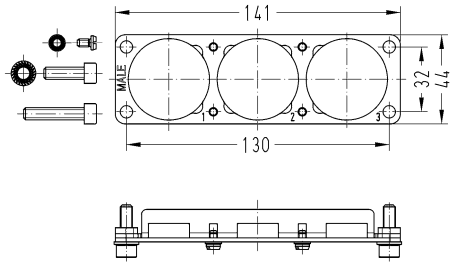 Tightening torque Fixing screws M6: 10 Nm Tightening torque Screws M4: 1.5 Nm

Identification	Part number	Drawing (dimensions in mm)
Han® HPR enlarged, Frame, for female inserts, 3x Han® HC Modular 650, Pack contents: 4x M4 screw, 4x washer SK S4, 4x washer SK S6, 4x cheese-head screw M6 x 20, 4x cheese-head screw M6 x 25 	09 11 000 9974	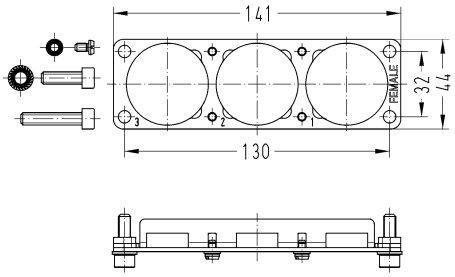 Tightening torque Fixing screws M6: 10 Nm Tightening torque Screws M4: 1.5 Nm
Han® HPR enlarged, Frame, for up to 8 single modules, A … H, Pack contents: 2x M4 screw, 2x washer SK S4, 4x cheese-head screw M6 x 20, 4x cheese-head screw M6 x 30, 4x washer SK S6 	09 11 000 9935	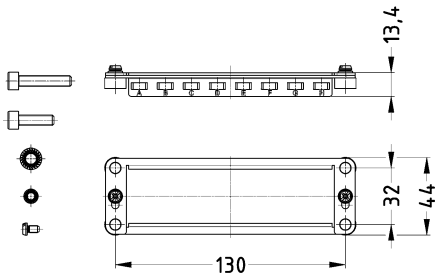 Tightening torque Fixing screws M6: 10 Nm Tightening torque Screws M4: 1.5 Nm
Han® HPR enlarged, Frame, for up to 8 single modules, a … h, Pack contents: 2x M4 screw, 2x washer SK S4, 4x cheese-head screw M6 x 20, 4x cheese-head screw M6 x 30, 4x washer SK S6 	09 11 000 9936	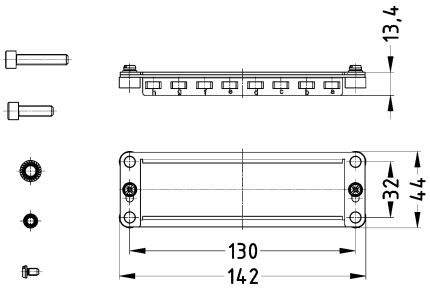 Tightening torque Fixing screws M6: 10 Nm Tightening torque Screws M4: 1.5 Nm

Features

- Secure and a visible connection of screening braid of shielded cables

Technical characteristics

Material (seal)	EPDM
Material (cable glands)	Brass, nickel plated
Material (clamping ring)	Polyamide
RoHS	compliant with exemption, compliant
RoHS exemptions	**6c:** Copper alloy containing up to 4 % lead by weight

Identification	Size	Clamping range (mm)	Part number	Drawing (dimensions in mm)
Han® HPR EasyCon, Cable gland, EMC version, 10 Nm 	M25 M25	9 ... 17 13 ... 21	19 00 000 5013 19 00 000 5019	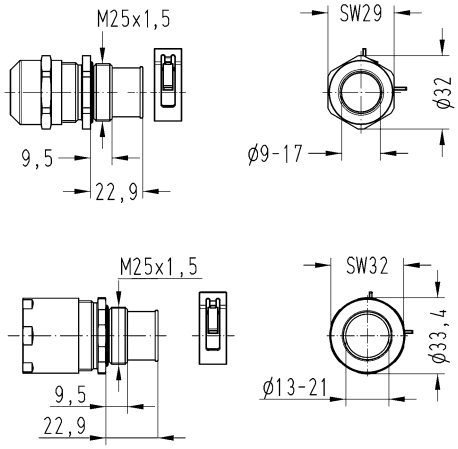
Han® HPR EasyCon, Cable gland, EMC version, 20 Nm 	M32 M32 M32	13 ... 21 16 ... 28 17 ... 22.5	19 00 000 5014 19 00 000 5022 19 00 000 5015	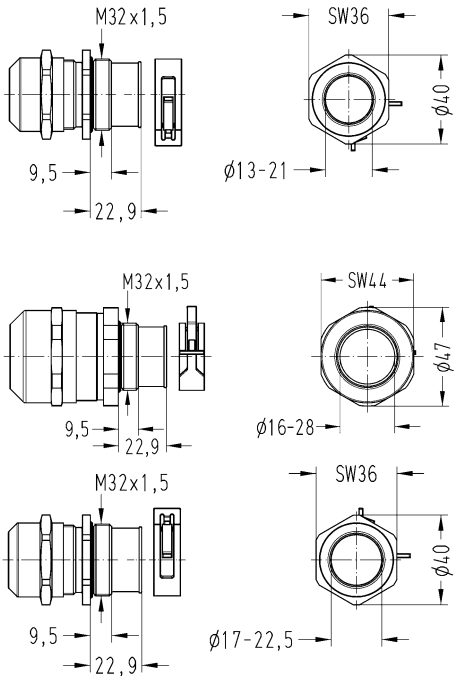

Features

- Hoods/housings for harsh outdoor environments
- Metal hoods and housings with excellent corrosion resistance
- Corrosion resistance ASTM B117-09 (500 h)
- Excellent EMC characteristics
- Vibration resistant acc. to IEC 61373 category 1B (Category 2 possible with usage of M6 distance bolts)

Technical characteristics

Limiting temperature	-40 ... +125 °C
Tightening torque (screw locking)	4 Nm
Degree of protection acc. to IEC 60529	IP65, IP68, IP69 / IPX9K acc. to ISO 20653
Material (hood/housing)	Aluminium die-cast, Corrosion resistant
Surface (hood/housing)	Powder-coated
Colour (hood/housing)	RAL 9005 (jet black)
Material (seal)	NBR
Material (locking)	Stainless steel
Material (accessories)	Aluminium, Metal
RoHS	compliant

Specifications and approvals

DNV GL

Hoods/housings for harsh outdoor environments
Screw locking

Identification	Cable entry	Part number	Drawing (dimensions in mm)
Han® HPR, Hoods, Top entry 		09 40 048 0451	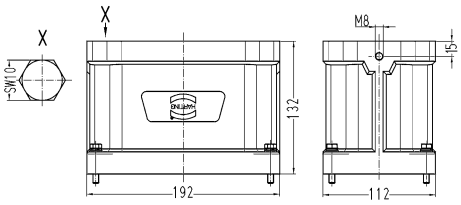
Han® HPR, Bulkhead mounted housings 		09 40 048 0311	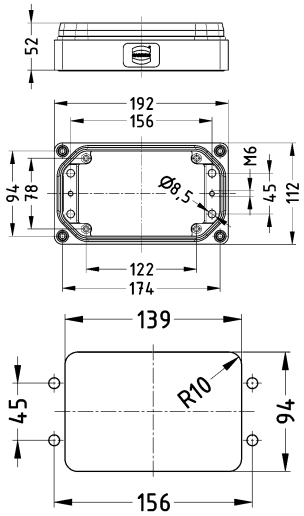 Panel cut out
Han® HPR, Bulkhead mounted housings, for 4 standard inserts - size 16 B 		09 40 048 0331	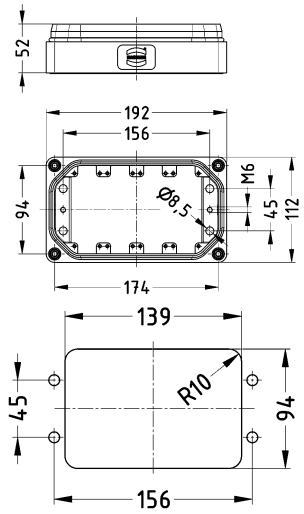 Panel cut out

Identification	Cable entry	Part number	Drawing (dimensions in mm)
Han® HPR, Surface mounted housing, Horizontal version, Top entry 		09 40 048 0951	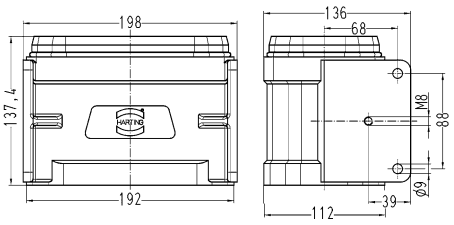
Han® HPR, Protection cover, for bulkhead mounted housings, for surface mounted housings 		09 40 048 5401	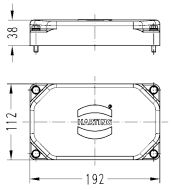
Han® HPR, Mounting cover, Distance bolt M5, Pack contents: 4 distance pieces, 4x M6 screw, 4 washers 		09 40 048 9803	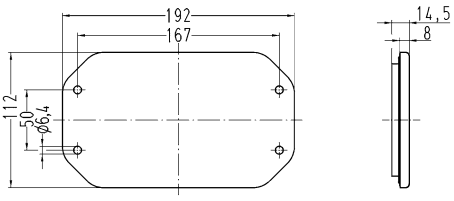 Basic size for above mentioned covers
Han® HPR, Mounting cover, Distance bolt M5, for male inserts, Pack contents: 4 distance pieces, 4x M6 screw, 4 washers 	4x M40	19 40 048 9801	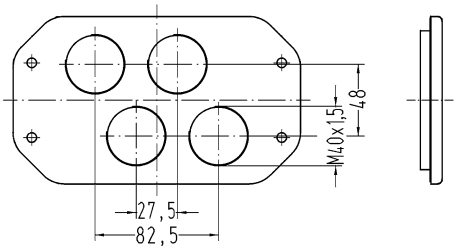
Han® HPR, Mounting cover, Distance bolt M5, for female inserts, Pack contents: 4 distance pieces, 4x M6 screw, 4 washers 	4x M40	19 40 048 9901	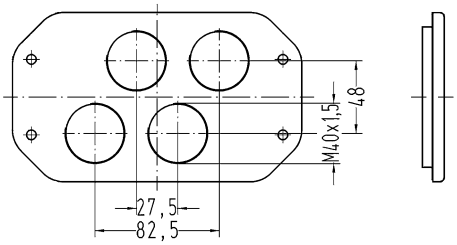
Han® HPR, Mounting cover, Distance bolt M6, Without cable entry, Pack contents: 4 distance pieces, 4x M6 screw, 4 washers		09 40 048 9801	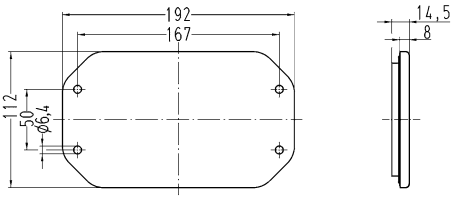

Identification	Cable entry	Part number	Drawing (dimensions in mm)
Han® HPR, Mounting cover, Distance bolt M6, 5 cable entries, Pack contents: 4 distance pieces, 4x M6 screw, 4 washers 	5x M32	19 40 048 9812	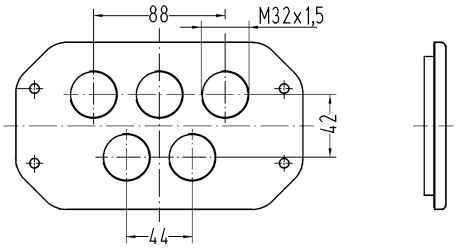
Han® HPR, Mounting cover, Distance bolt M6, 6 cable entries, Pack contents: 4 distance pieces, 4x M6 screw, 4 washers 	6x M25 6x M32	19 40 048 9820 19 40 048 9822	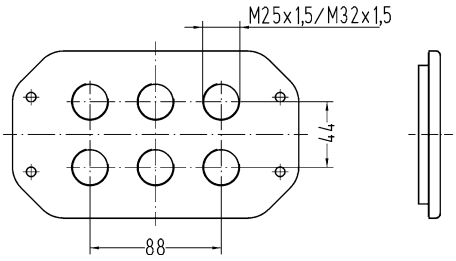 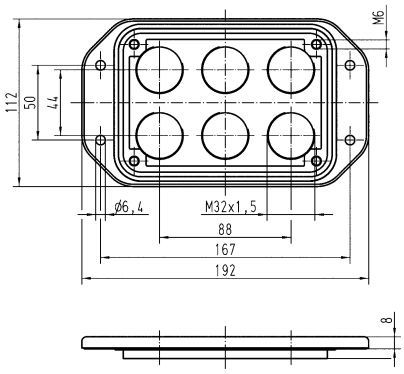
Han® HPR, Mounting cover, Distance bolt M6, 10 cable entries, Pack contents: 4 distance pieces, 4x M6 screw, 4 washers 	10x M25	19 40 048 9860	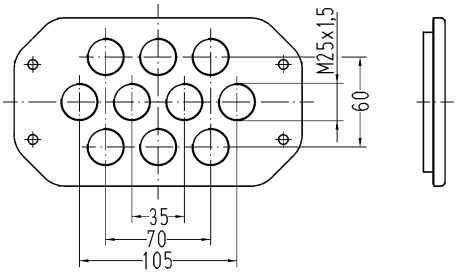

Identification	Cable entry	Part number	Drawing (dimensions in mm)
Mounting frames, Han® HPR, Thread M8 		09 40 000 9965	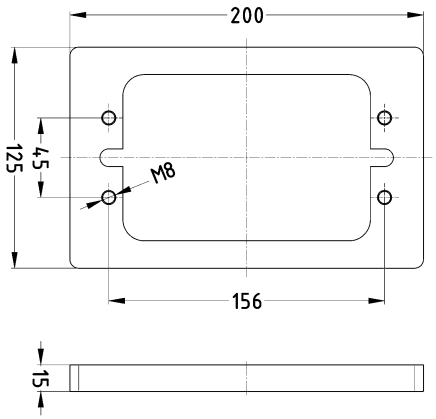

Identification	Part number Male	Part number Female	Drawing (dimensions in mm)
Han® HPR, Frame, for male inserts, 6x Han® HC Modular 350 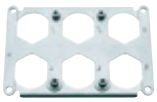	09 40 048 9806		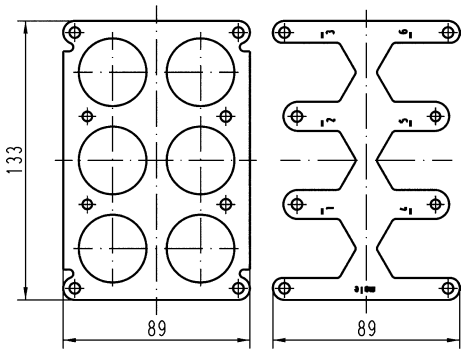
Han® HPR, Frame, for male inserts, 5x Han® HC Modular 350 + 1x Han® HC Modular 350 PE 	09 40 048 9809		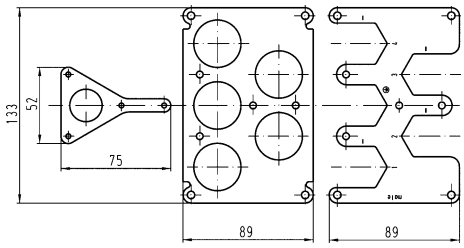
Han® HPR, Frame, for male inserts, 4x HC 350 contacts + 2x Han® Q 5/0 	09 40 048 9810		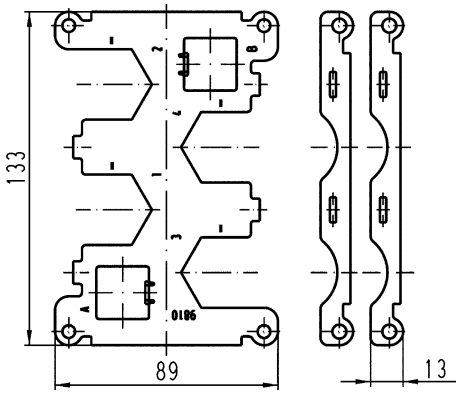
Han® HPR, Frame, for male inserts, 10x Han® HC Modular 350 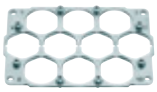	09 40 048 9860		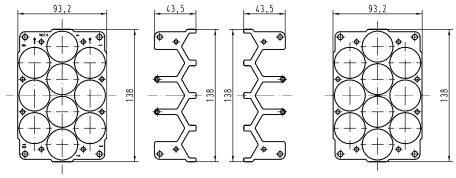

Identification	Part number Male	Part number Female	Drawing (dimensions in mm)
Han® HPR, Frame, for female inserts, 6x Han® HC Modular 350 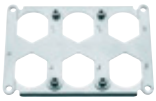		09 40 048 9906	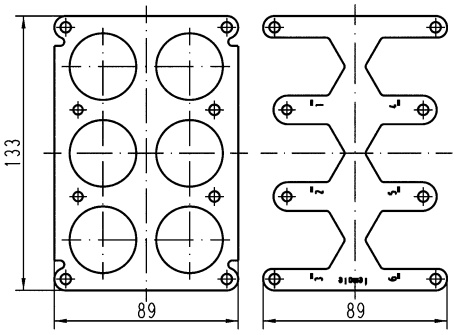
Han® HPR, Frame, for female inserts, 5x Han® HC Modular 350 + 1x Han® HC Modular 350 PE 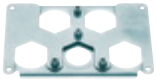		09 40 048 9909	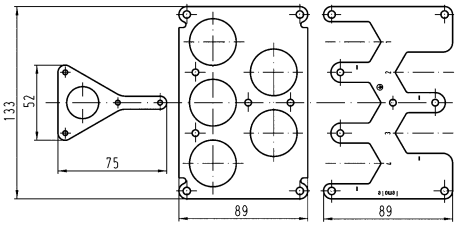
Han® HPR, Frame, for female inserts, 4x HC 350 contacts + 2x Han® Q 5/0 		09 40 048 9910	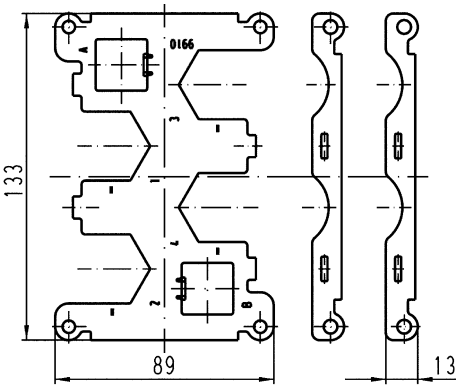
Han® HPR, Frame, for female inserts, 10x Han® HC Modular 350 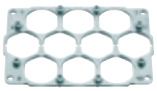		09 40 048 9960	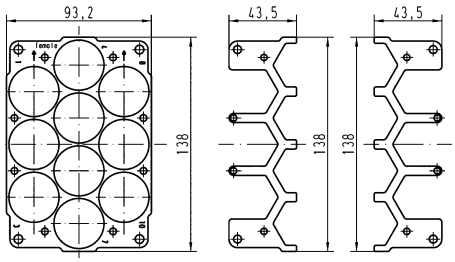

Identification	Part number Male	Part number Female	Drawing (dimensions in mm)
Han® HPR, Frame, for male inserts, 4x HC 650 contacts + 2x Han® Q 5/0 	09 40 048 9811		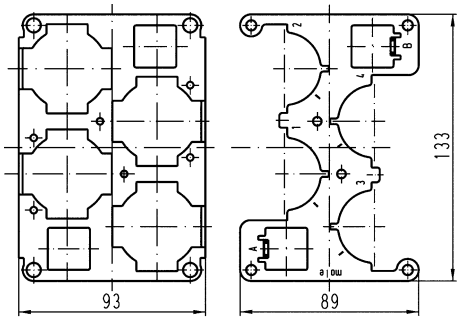
Han® HPR, Frame, for female inserts, 4x HC 650 contacts + 2x Han® Q 5/0 		09 40 048 9911	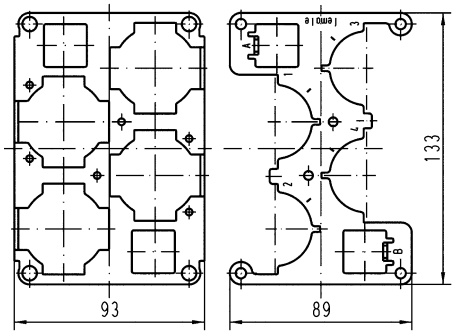
Han® HPR, Frame, for 4 standard inserts - size 16 B  Suitable for hoods and surface mounted housings in conjunction with cover 09 40 048 9803/19 40 048 9801/19 40 048 9901 only	09 40 048 9912	09 40 048 9912	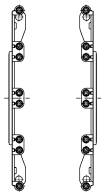

Innovative High Current Connectors for Power Transmission on Trains

Photo courtesy: Stadtwerke München, Munich

The Split hood and housing “open system” of the Han® 24HPR EasyCon with the innovative concept for shielded cables is an excellent solution for the versatile power requirements and the rapid moving operational cycle on Trains.
In use are the approved Han® HC Modular 350A and 650A Crimp-Contacts.